Grade "A"

Pasteurized

Milk

Ordinance

(Includes provisions from the Grade "A" Condensed and Dry Milk Products and Condensed and Dry Whey--Supplement I to the Grade "A" PMO)

2005 Revision

U.S. Department of Health and Human Services

Public Health Service

Food and Drug Administration

LIST OF PREVIOUS EDITIONS OF USPHS/FDA MILK ORDINANCE

1924. *Ordinance* only. Reprint No. 971 from *Public Health Reports* of November 7, 1924.
1926. *Ordinance* only. Reprint No. 1099 from *Public Health Reports* of July 30, 1926.
1927. *Ordinance and Code.* Mimeographed tentative draft, November 1927.
1929. *Ordinance and Code.* Mimeographed, July 1929.
1929. *Ordinance and Code.* Mimeographed, September 1929.
1931. *Ordinance and Code.* Mimeographed, September 1931.
1933. *Ordinance* only. Mimeographed, July 1933.
1933. *Ordinance and Code.* Mimeographed, July 1933.
1933. *Ordinance* only. Rotoprinted, December 1933.
1933. *Ordinance and Code.* Rotoprinted, December 1933.
1934. *Ordinance and Code.* Rotoprinted, August 1934.
1934. *Ordinance* only. Rotoprinted, August 1934.
1935. *Ordinance/Code.* Printed as *Public Health Bulletin No. 220,* 1935 Edition, July 1935.
1936. *Ordinance* only. Mimeographed, December 1936.
1936. *Ordinance/Code.* Printed as *Public Health Bulletin No. 220,* 1936 Edition, January 1937.
1939. *Ordinance and Code.* Mimeographed, January 1939.
1939. *Ordinance* only. Mimeographed, February 1939.
1939. *Ordinance* only. Mimeographed, November 1939.
1939. *Ordinance/Code*. Printed as *Public Health Bulletin No. 220*, 1939 Edition, February 1940.
1947. *Ordinance* only. Mimeographed tentative draft, August 1947.
1949. *Ordinance* only. Multilthed, April 1949.
1951. *Ordinance* only. Multilthed, November 1951.
1953. *Ordinance/Code.* Printed as *Public Health Service Publication No. 229.*
1965. *Grade "A" Pasteurized Milk Ordinance. Public Health Service Publication No. 229.*
1978. *Grade "A" Pasteurized Milk Ordinance. Public Health Service/Food and Drug Admin.*
1983. *Grade "A" Pasteurized Milk Ordinance. Public Health Service/Food and Drug Admin.*
1985. *Grade "A" Pasteurized Milk Ordinance. Public Health Service/Food and Drug Admin.*
1989. *Grade "A" Pasteurized Milk Ordinance. Public Health Service/Food and Drug Admin.*
1993. *Grade "A" Pasteurized Milk Ordinance. Public Health Service/Food and Drug Admin.*
1995. *Grade "A" Pasteurized Milk Ordinance*. *Public Health Service/Food and Drug Admin.*
1997. *Grade "A" Pasteurized Milk Ordinance*. *Public Health Service/Food and Drug Admin.*
1999. *Grade "A" Pasteurized Milk Ordinance*. *Public Health Service/Food and Drug Admin.*
2001. *Grade "A" Pasteurized Milk Ordinance*. *Public Health Service/Food and Drug Admin.*
2003. *Grade "A" Pasteurized Milk Ordinance, Including Provisions from the Grade "A" Condensed and Dry Milk Products and Condensed and Dry Whey--Supplement I to the Grade "A" Pasteurized Milk Ordinance*. *Public Health Service/Food and Drug Admin.*
2005. *Grade "A" Pasteurized Milk Ordinance, Including Provisions from the Grade "A" Condensed and Dry Milk Products and Condensed and Dry Whey--Supplement I to the Grade "A" Pasteurized Milk Ordinance*. *Public Health Service/Food and Drug Admin.*

FOREWORD

The milk sanitation program of the United States Public Health Service (USPHS) is one of its oldest and most respected activities. The interest of the USPHS in milk sanitation stems from two important public health considerations. First, of all foods, none surpasses milk as a single source of those dietary elements needed for the maintenance of proper health, especially in children and older citizens. For this reason, the USPHS has for many years promoted increased milk consumption. Second, milk has a potential to serve as a vehicle of disease transmission and has, in the past, been associated with disease outbreaks of major proportions.

The incidence of milk-borne illness in the United States has been sharply reduced. In 1938, milkborne outbreaks constituted twenty-five percent (25%) of all disease outbreaks due to infected foods and contaminated water. Our most recent information reveals that milk and fluid milk products continue to be associated with less than one percent (<1%) of such reported outbreaks. Many groups have contributed to this commendable achievement, including Public Health and Agricultural Agencies, dairy and related industries, several interested professional groups, educational institutions and the consuming public. The United States Public Health Service/Food and Drug Administration (USPHS/FDA) is proud to have contributed to the protection and improvement of the milk supply of the nation through technical assistance, training, research, standards development, evaluation and certification activities.

Despite the progress that has been made, occasional milkborne outbreaks still occur, emphasizing the need for continued vigilance at every stage of production, processing, pasteurization and distribution of milk and milk products. Problems associated with assuring the safety of milk and milk products have become extremely complex because of new products, new processes, new materials and new marketing patterns, which must be evaluated in terms of their public health significance. The *Grade "A" Pasteurized Milk Ordinance* (Grade "A" PMO), 2005 Revision translates this new knowledge and technology into effective and practicable public health practices and incorporates the provisions of the *Grade "A" Condensed and Dry Milk Ordinance--Supplement I to the Grade "A" Pasteurized Milk Ordinance*.

The responsibility for insuring the ready availability and safety of milk and milk products is not confined to an individual community or a State, or to the Federal Government, it is the concern of the entire nation. With the continued cooperation of all engaged in assuring the safety of milk and milk products, including Government and industry, this responsibility can be accepted with confidence.

PREFACE

USPHS activities in the area of milk sanitation began at the turn of the century with studies on the role of milk in the spread of disease. These studies led to the conclusion that effective public health control of milkborne disease requires the application of sanitation measures throughout the production, handling, pasteurization, and distribution of milk and milk products. These early studies were followed by research to identify and evaluate sanitary measures, which might be used to control disease, including studies that led to improvement of the pasteurization process.

To assist States and Municipalities in initiating and maintaining effective programs for the prevention of milkborne disease, the USPHS, in 1924, developed a model regulation known as the *Standard Milk Ordinance* for voluntary adoption by State and Local Milk Control Agencies. To provide for the uniform interpretation of this *Ordinance*, an accompanying *Code* was published in 1927, which provided administrative and technical details as to satisfactory compliance. This model milk regulation, now titled the *Grade "A" Pasteurized Milk Ordinance* (Grade "A" PMO), 2005 Revision, incorporates the provisions governing the processing, packaging, and sale of Grade "A" milk and milk products, including buttermilk and buttermilk products, whey and whey products, and condensed and dry milk products and represents the 26th revision and incorporates new knowledge into public health practice.

The USPHS/FDA alone did not produce the *Grade "A" PMO*. As with preceding editions, it was developed with the assistance of Milk Regulatory and Rating Agencies at every level of Federal, State, and Local Government, including both Health and Agriculture Departments; all segments of the dairy industry, including producers, milk plant operators, equipment manufacturers, and associations; many educational and research institutions; and with helpful comments from many individual sanitarians and others.

The USPHS/FDA's recommended *Grade "A" PMO* is the basic standard used in the voluntary Cooperative State-USPHS/FDA Program for the Certification of Interstate Milk Shippers, a program participated in by all fifty (50) States, the District of Columbia and U.S. Trust Territories. The National Conference on Interstate Milk Shipments (NCIMS) in accordance with the Memorandum of Understanding with the Food and Drug Administration (FDA) has at its biennial conferences recommended changes and modifications to the *Grade "A" PMO*. These changes have been incorporated into this 2005 revision. The counsel and guidance rendered by the Conference in preparation of this edition of the *Grade "A" PMO* is deeply appreciated.

The *Grade "A" PMO* is incorporated by reference in Federal specifications for procurement of milk and milk products; is used as the sanitary regulation for milk and milk products served on interstate carriers; and is recognized by the Public Health Agencies, the milk industry, and many others as the national standard for milk sanitation. The *Grade "A" PMO* adopted and uniformly applied will continue to provide effective public health protection without being unduly burdensome to either Regulatory Agencies or the dairy industry. It represents a "grass-roots" consensus of current knowledge and experiences and as such represents a practical and equitable milk sanitation standard for the nation.

Within the 2005 *Grade "A" PMO*, the administrative and technical requirements for the manufacture of condensed and dry milk products and condensed and dry whey included in the *Grade "A" Condensed and Dry Milk Ordinance--Supplement I to the Grade "A" Pasteurized Milk Ordinance* have been incorporated as directed by the 2001 NCIMS.

INTRODUCTION

The following *Grade "A" PMO,* with Appendices, is recommended for legal adoption by States, Counties, and Municipalities, in order to encourage a greater uniformity and a higher level of excellence of milk sanitation practice in the United States. An important purpose of this recommended standard is to facilitate the shipment and acceptance of milk and milk products of high sanitary quality in interstate and intrastate commerce.

This edition of the *Ordinance* contains sanitary standards for only Grade "A" raw milk for pasteurization and Grade "A" milk and milk products defined in Section 1.

The following form is suggested for adoption by States, Counties, and Municipalities subject to the approval of the appropriate legal authority. Adoption of this form will reduce the cost of publishing and printing, and will enable the *Grade "A" PMO* to be easily kept current. The adoption of this form is considered legal in many States and has been so adopted. The Council of State Governments has prepared a model State law, *Milk and Food Codes Adoption-by-Reference Act*,[1] which is recommended for enactment by States to enable communities to adopt milk and food ordinances by reference.

An ordinance to regulate the production, transportation, processing, handling, sampling, examination, labeling, and sale of Grade "A" milk and milk products; the inspection of dairy farms, milk plants, receiving stations, transfer stations, milk tank truck cleaning facilities, milk tank trucks and bulk milk hauler/samplers; the issuing and revocation of permits to milk producers, bulk milk hauler/samplers, milk tank trucks, milk transportation companies, milk plants, receiving stations, transfer stations, milk tank truck cleaning facilities, haulers, and distributors; and the fixing of penalties.

The.....of.....[2] ordains:

SECTION 1. The production, transportation, processing, handling, sampling, examination, labeling and sale of all Grade "A" milk and milk products sold for the ultimate consumption within the ..... of .....[2] or its jurisdiction; the inspection of dairy farms, milk plants, receiving stations, transfer stations, milk tank truck cleaning facilities, milk tank trucks and bulk milk hauler/samplers; and the issuing and revocation of permits to milk producers, bulk milk hauler/samplers, milk tank trucks, milk transportation companies, milk plants, receiving stations, transfer stations, milk tank truck cleaning facilities, haulers, and distributors shall be regulated in accordance with the provisions of the current edition of the *Grade "A" PMO*, a certified copy[3] of

---

[1] A copy of the model act is included in Suggested State Legislation Programs for 1950, developed by the Council of State Governments, Box 11910, Iron Works Pike, Lexington, KY 40578.

[2] Substitute proper legal jurisdiction here and in all similar places throughout this *Ordinance*.

[3] A certified copy may be secured from the Department of Health and Human Services, Public Health Service, Food and Drug Administration, Milk Safety Branch (HFS-626), 5100 Paint Branch Parkway, College Park, MD 20740-3835.

which is filed in the office of the appropriate governing official. Provided, that Sections 15 and 16 of this *Ordinance* shall be replaced, respectively by Sections 2 and 3 below.

SECTION 2. Any person who shall violate any of the provisions of this *Ordinance* shall be guilty of a misdemeanor and, upon conviction thereof, shall be punished by a fine of not more than $....., and/or such persons may be enjoined from continuing such violations. Each day upon which such a violation occurs shall constitute a separate violation.

SECTION 3. All ordinances and parts of ordinances in conflict with this *Ordinance*, shall be repealed twelve (12) months after the adoption of this *Ordinance*, at which time this *Ordinance* shall be in full force and effect, as provided by law.

Legal Aspects: Recommendations concerning legal aspects have been suggested from time to time by the Office of the Chief Counsel and have been incorporated into the *Ordinance*. Other changes have also been incorporated on the advice of various State and Local legal counsel.

The *Ordinance* has been widely adopted and used for many years and has been upheld by court actions. One of the most comprehensive decisions upholding the various provisions of the *Ordinance* was that of the District Court, Reno County, Kansas, in the case of *Billings et al. v. City of Hutchinson et al.,* decided May 1, 1934. In this action, the plaintiffs unsuccessfully sought to enjoin the enforcement of the Hutchinson ordinance on the grounds that: (a) it was unreasonable; (b) it conflicted with State statutes; (c) the license fees provided in the local ordinance (but not in the *Ordinance* recommended by the USPHS) were in excess of expenses; and (d) the milk inspector was clothed with arbitrary powers. (Reprint No. 1629 from *Public Health Reports* of June 8, 1934.)

The model *Ordinance* discourages the use of public health regulations to establish unwarranted trade barriers against the acceptance of high quality milk from other milksheds. (Refer to Section 11) On repeated requests from the Association of State and Territorial Health Officers and the NCIMS, the USPHS/FDA is actively cooperating in the voluntary program for the Certification of Interstate Milk Shippers. Such a program would be impossible without widespread agreement on uniform standards, such as those of this recommended *Ordinance*.

The value of these standards as a means of overcoming interstate trade barriers was recognized by the U.S. Supreme Court in the case of the *Dean Milk Company v. City of Madison.* (No. 258--October term, 1950) The Court reversed the decision of the Wisconsin Supreme Court, which had sustained an ordinance requirement imposing a 5-mile limit on the location of pasteurization plants selling milk in Madison and pointed out that Madison consumers would be adequately safeguarded if the city relied upon the provisions of Section 11 of the USPHS's recommended *Milk Ordinance*.

The USPHS/FDA does not have legal jurisdiction in the enforcement of milk sanitation standards, except on interstate carriers and milk and milk products shipped in interstate commerce. It serves solely in an advisory and stimulative capacity and its program is designed primarily to assist State and Local Regulatory Agencies. Its aim is to promote the establishment

of effective and well-balanced milk sanitation programs in each State; to stimulate the adoption of adequate and uniform State and Local milk control legislation; and to encourage the application of uniform enforcement procedures through appropriate legal and educational measures.

When this *Ordinance* is adopted locally, its enforcement becomes a function of the Local or State authorities. Consequently, the *Ordinance* should be adopted only if adequate provisions can be made for qualified personnel and for suitable laboratory facilities. Small Municipalities which cannot afford to provide these services should arrange for supervision by the County or State Health Department, or seek cooperation with neighboring Municipalities in organizing a milk-control district or area.

The charter and the legal counsel of the government unit involved should be consulted for information or advice on proper legal procedures, such as the recording and advertising of the *Ordinance* after passage.

Adoption: In the interest of national uniformity, it is recommended that no changes be made in this *Ordinance* when adopted by a State or Local community, unless changes are necessary to avoid conflict with State law. Modifications should be contemplated with extreme caution so as not to render the *Ordinance* unenforceable. In order to promote uniformity, it is recommended that all of the Administrative Procedures be adopted as well.

Amendment of Existing Regulations: States and Communities that have adopted the 2003 or earlier editions of the USPHS/FDA recommended *Grade "A" PMO* are urged to bring such *Ordinance* up-to-date in order to take advantage of the most current developments in milk sanitation and administration. States and Communities whose milk sanitation law or regulations are not based on a previous USPHS/FDA recommended *Grade "A" PMO* are urged to consider the attendant public health benefits, as well as those economic in nature, which can accrue upon the adoption and implementation of the *Grade "A" PMO*.

TABLE OF CONTENTS

Page

LIST OF PREVIOUS EDITIONS OF USPHS/FDA MILK ORDINANCE.....i

FORWARD..... ii

PREFACE..……..iii

INTRODUCTION……..……..v

TABLE OF CONTENTS……..viii

ILLUSTRATIONS ……..……...…….XIII
TABLES……..……..…XIV

GRADE 'A' PASTEURIZED MILK ORDINANCE (*GRADE "A" PMO)* -2005 ……...1

SECTION 1. DEFINITIONS..... …1
SECTION 2. ADULTERATED OR MISBRANDED MILK OR MILK PRODUCTS..... 10
SECTION 3. PERMITS..... 10
SECTION 4. LABELING..... 13
SECTION 5. INSPECTION OF DAIRY FARMS AND MILK PLANTS 16
SECTION 6. THE EXAMINATION OF MILK AND MILK PRODUCTS 21
SECTION 7. STANDARDS FOR GRADE "A" MILK AND MILK PRODUCTS 26

STANDARDS FOR GRADE "A" RAW MILK FOR PASTEURIZATION, ULTRA-PASTEURIZATION OR ASEPTIC PROCESSING……..30

ITEM 1R. ABNORMAL MILK..... 30
ITEM 2R. MILKING BARN, STABLE OR PARLOR - CONSTRUCTION 31
ITEM 3R. MILKING BARN, STABLE OR PARLOR - CLEANLINESS 33
ITEM 4R. COWYARD 34
ITEM 5R. MILKHOUSE - CONSTRUCTION AND FACILITIES 35
ITEM 6R. MILKHOUSE - CLEANLINESS 39
ITEM 7R. TOILET..... 39
ITEM 8R. WATER SUPPLY 40
ITEM 9R. UTENSILS AND EQUIPMENT - CONSTRUCTION..... 42
ITEM 10R. UTENSILS AND EQUIPMENT - CLEANING 43
ITEM 11R. UTENSILS AND EQUIPMENT - SANITIZATION 44
ITEM 12R. UTENSILS AND EQUIPMENT - STORAGE 45
ITEM 13R. MILKING - FLANKS, UDDERS AND TEATS 46
ITEM 14R. PROTECTION FROM CONTAMINATION 47
ITEM 15R. DRUG AND CHEMICAL CONTROL..... 48
ITEM 16R. PERSONNEL - HANDWASHING FACILITIES..... 49
ITEM 17R. PERSONNEL - CLEANLINESS 50
ITEM 18R. RAW MILK COOLING..... 50

ITEM 19R. INSECT AND RODENT CONTROL 52

STANDARDS FOR GRADE "A" PASTEURIZED, ULTRA-PASTEURIZED AND ASEPTICALLY PROCESSED MILK AND MILK PRODUCTS 54

ITEM 1P. FLOORS - CONSTRUCTION 54
ITEM 2P. WALLS AND CEILINGS - CONSTRUCTION 55
ITEM 3P. DOORS AND WINDOWS 56
ITEM 4P. LIGHTING AND VENTILATION 56
ITEM 5P. SEPARATE ROOMS 57
ITEM 6P. TOILET-SEWAGE DISPOSAL FACILITIES 58
ITEM 7P. WATER SUPPLY 59
ITEM 8P. HANDWASHING FACILITIES 61
ITEM 9P. MILK PLANT CLEANLINESS 61
ITEM 10P. SANITARY PIPING 62
ITEM 11P. CONSTRUCTION AND REPAIR OF CONTAINERS AND EQUIPMENT 63
ITEM 12P. CLEANING AND SANITIZING OF CONTAINERS AND EQUIPMENT 65
ITEM 13P. STORAGE OF CLEANED CONTAINERS AND EQUIPMENT 72
ITEM 14P. STORAGE OF SINGLE-SERVICE CONTAINERS, UTENSILS AND MATERIALS 72
ITEM 15P. PROTECTION FROM CONTAMINATION 73
ITEM 16P. PASTEURIZATION AND ASEPTIC PROCESSING 78
ITEM 16P.(A). BATCH PASTEURIZATION 82
ITEM 16P.(B). HIGH-TEMPERATURE, SHORT-TIME, (HTST) CONTINUOUS-FLOW PASTEURIZATION 85
ITEM 16P.(C). ASEPTIC PROCESSING SYSTEMS 92
ITEM 16P.(D). PASTEURIZERS AND ASEPTIC PROCESSING SYSTEMS EMPLOYING REGENERATIVE HEATING 96
MILK OR MILK PRODUCT-TO-MILK OR MILK PRODUCT REGENERATIVE HEATING 96
MILK OR MILK PRODUCT-TO-WATER TO-MILK OR MILK PRODUCT REGENERATIVE HEATING 98
ITEM 16P.(E). PASTEURIZATION AND ASEPTIC PROCESSING RECORDS, EQUIPMENT TESTS AND EXAMINATIONS 99
ITEM 17P. COOLING OF MILK AND MILK PRODUCTS 104
ITEM 18P. BOTTLING, PACKAGING AND CONTAINER FILLING 107
ITEM 19P. CAPPING, CONTAINER CLOSURE AND SEALING AND DRY MILK PRODUCT STORAGE 109
ITEM 20P. PERSONNEL - CLEANLINESS 110
ITEM 21P. VEHICLES 111
ITEM 22P. SURROUNDINGS 112

SECTION 8. ANIMAL HEALTH 113
SECTION 9. MILK AND MILK PRODUCTS WHICH MAY BE SOLD 115
SECTION 10. TRANSFERRING; DELIVERY CONTAINERS; COOLING 115
SECTION 11. MILK AND MILK PRODUCTS FROM POINTS BEYOND THE LIMITS OF ROUTINE INSPECTION 116
SECTION 12. PLANS FOR CONSTRUCTION AND RECONSTRUCTION 118
SECTION 13. PERSONNEL HEALTH 118

SECTION 14. PROCEDURE WHEN INFECTION OR HIGH RISK OF INFECTION IS DISCOVERED 115
SECTION 15. ENFORCEMENT 121
SECTION 16. PENALTY 121
SECTION 17. REPEAL AND DATE OF EFFECT 121
SECTION 18. SEPARABILITY CLAUSE 121

FOOTNOTES 122

APPENDIX A. ANIMAL DISEASE CONTROL 124

APPENDIX B. MILK SAMPLING, HAULING, AND TRANSPORTATION 125

I. MILK SAMPLING AND HAULING PROCEDURES 125
II. REQUIREMENTS FOR USING AN APPROVED IN-LINE SAMPLER 128
III. MILK TANK TRUCK PERMITTING AND INSPECTION. 129

APPENDIX C. DAIRY FARM CONSTRUCTION STANDARDS AND MILK PRODUCTION 134

I. TOILET AND SEWAGE DISPOSAL FACILITIES 134
II. GUIDELINE #45-GRAVITY FLOW GUTTERS FOR MANURE REMOVAL IN MILKING BARNS 139
III. CONVALESCENT (MATERNITY) PENS IN MILKING BARNS AND STABLES.. 143
IV. GUIDELINES FOR CONVENTIONAL STALL BARN WITH GUTTER GRATES OVER LIQUID MANURE STORAGE 144
V. DAIRY - CONSTRUCTION AND OPERATION 148
MILKING BARN, STABLE OR PARLOR 148
MILKHOUSE 149
MILKING METHODS 150
REVERSE FLUSH SYSTEMS 151
DRUG RESIDUE AVOIDANCE CONTROL MEASURES 152
INSECT AND RODENT CONTROL 152

APPENDIX D. STANDARDS FOR WATER SOURCES 155

I. LOCATION OF WATER SOURCES 155
II. CONSTRUCTION 158
III. DISINFECTION OF WATER SOURCES 164
IV. CONTINUOUS WATER DISINFECTION 167
V. WATER RECLAIMED FROM MILK AND MILK PRODUCTS 169
VI. WATER RECLAIMED FROM HEAT EXCHANGER PROCESSES 170
VII. DRAWINGS OF CONSTRUCTION DETAILS FOR WATER SOURCES 171

APPENDIX E. EXAMPLES OF 3-OUT-OF-5 COMPLIANCE ENFORCEMENT PROCEDURES 189

APPENDIX F. CLEANING AND SANITIZATION 191

I. METHODS OF SANITIZATION 191
II. EVAPORATING, DRYING AND DRY PRODUCT EQUIPMENT CLEANING 191

APPENDIX G. CHEMICAL AND BACTERIOLOGICAL TESTS 200

I. PRIVATE WATER SUPPLIES AND RECIRCULATED WATER - BACTERIOLOGICAL. 200
II. PASTEURIZATION EFFICIENCY-FIELD PHOSPHATASE TEST 200
III. PHOSPHATASE REACTIVATION IN HTST PASTEURIZED PRODUCTS 201
IV. DETECTION OF PESTICIDES IN MILK 201
V. DETECTION OF DRUG RESIDUES IN MILK 202
VI. ANALYSIS OF MILK AND MILK PRODUCTS FOR VITAMIN A AND D_3 CONTENT 203

APPENDIX H. PASTEURIZATION EQUIPMENT AND PROCEDURES……..204

I. HTST PASTEURIZATION 204
II. AIR FOR DRYING EQUIPMENT AND AIR UNDER PRESSURE-DIRECT CONTACT WITH MILK AND MILK PRODUCTS AND PRODUCT CONTACT SURFACES 215
III. CULINARY STEAM - MILK AND MILK PRODUCTS 222
IV. THERMOMETER SPECIFICATIONS 225
V. CRITERIA FOR THE EVALUATION OF COMPUTERIZED SYSTEMS FOR GRADE 'A' PUBLIC HEALTH CONTROLS 233
VI. CRITERIA FOR STEAM-BLOCK TYPE FDD SYSTEMS 245
VII. MILK AND MILK PRODUCTS HACCP CCP MODELS FOR PASTEURIZATION EQUIPMENT……246

APPENDIX I. PASTEURIZATION EQUIPMENT AND CONTROLS - TESTS……249

I. TESTING APPARATUS SPECIFICATIONS 249
II. TEST PROCEDURES 250

APPENDIX J. STANDARDS FOR THE FABRICATION OF SINGLE-SERVICE CONTAINERS AND CLOSURES FOR MILK AND MILK PRODUCTS……289

PREFACE 289
STANDARDS FOR THE FABRICATION OF SINGLE-SERVICE CONTAINERS AND CLOSURES FOR MILK AND MILK PRODUCTS……..289
A. PURPOSE AND SCOPE 289
B. DEFINITIONS 290
C. BACTERIAL STANDARDS AND EXAMINATION OF SINGLE-SERVICE CONTAINERS AND CLOSURES 291
D. FABRICATION PLANT STANDARDS 292
1. FLOORS 292
2. WALLS AND CEILINGS 292
3. DOORS AND WINDOWS 292
4. LIGHTING AND VENTILATION 292
5. SEPARATE ROOMS 293
6. TOILET FACILITIES - SEWAGE DISPOSAL 293
7. WATER SUPPLY 293
8. HANDWASHING FACILITIES 294
9. PLANT CLEANLINESS 294

10. LOCKER AND LUNCH ROOMS 294
11. DISPOSAL OF WASTES 294
12. PERSONNEL - PRACTICES 294
13. PROTECTION FROM CONTAMINATION 294
14. STORAGE OF MATERIALS and FINISHED PRODUCT 295
15. FABRICATING EQUIPMENT 296
16. MATERIALS FOR CONSTRUCTION OF CONTAINERS and CLOSURES 296
17. WAXES, ADHESIVES, SEALANTS, COATINGS AND INKS 296
18. HANDLING OF CONTAINERS AND EQUIPMENT 297
19. WRAPPING AND SHIPPING 297
20. IDENTIFICATION AND RECORDS 297
21. SURROUNDINGS 298

E. CRITERIA FOR LISTING CERTIFIED SINGLE-SERVICE MANUFACTURERS IN THE *IMS LIST*……..298

APPENDIX K. HACCP PROGRAM……300

I. THE HACCP SYSTEM INTRODUCTION……...300
II. IMPLEMENTATION OF A HACCP SYSTEM…….301
III. EMPLOYEE EDUCATION AND TRAINING……308
IV. TRAINING AND STANDARDIZATION…….308
IV. HACCP AUDITS AND FOLLOW-UP ACTIONS……309

APPENDIX L. APPLICABLE REGULATIONS, STANDARDS OF IDENTITY FOR MILK AND MILK PRODUCTS AND THE *FEDERAL FOOD, DRUG, AND COSMETIC ACT*……312

APPENDIX M. REPORTS AND RECORDS……313

APPENDIX N. DRUG RESIDUE TESTING AND FARM SURVEILLANCE……..314

I. INDUSTRY RESPONSIBILITIES 314
II. REGULATORY AGENCY RESPONSIBILITIES 315
III. TESTING PROGRAM FOR DRUG RESIDUES ESTABLISHED ...…….317
IV. ESTABLISHED TOLERANCES AND/OR SAFE LEVELS OF DRUG RESIDUES 322
V. APPROVED METHODS ……322

APPENDIX O. VITAMIN FORTIFICATION OF FLUID MILK PRODUCTS……...323

APPENDIX P. PERFORMANCE-BASED DAIRY FARM INSPECTION SYSTEM..328

APPENDIX Q. OPERATION OF AUTOMATIC MILK INSTALLATIONS FOR THE PRODUCTION OF GRADE "A" RAW MILK FOR PASTEURIZATION……...331

APPENDIX R. DETERMINATION OF TIME/TEMPERATURE CONTROL FOR SAFETY OF MILK AND MILK PRODUCTS 333

INDEX…….. 337

ILLUSTRATIONS

Page

Figure 1. Side Cross Section of a Gravity Flow Gutter 139
Figure 2. Stepped Gravity Flow Gutter..... 140
Figure 3. Cross Section of a Typical Gutter and Grate 140
Figure 4. Manure Transfer to Storage 142
Figure 5. Side Cross Section of a Convalescent Pen 143
Figure 6. Schematic Diagram Showing Suggested Exhaust Fan Locations for a Typical Stall Dairy Barn with Gutter Grates Over Liquid Manure Storage 147
Figure 7. Schematic Diagram Showing General Pattern of Ventilation Air Movement, Slot Inlet Design and Fan House for Pit Fans 147
Figure 8. Bored Well with Driven Well Point..... 172
Figure 9. Drilled Well with Submersible Pump 173
Figure 10. Dug Well with Two-Pipe Jet Pump Installation 174
Figure 11. Pumphouse..... 175
Figure 12. Spring Protection 176
Figure 13. Pond..... 177
Figure 14. Schematic Diagram of a Pond Water-Treatment System 177
Figure 15. Cistern..... 178
Figure 16. Typical Concrete Reservoir 179
Figure 17. Pit-less Adapter with Submersible Pump Installation for Basement Storage..... 180
Figure 18. Clamp-on Pit-less Adapter with Concentric External Piping for "Shallow Well" Pump Installation..... 1811
Figure 19. Pit-less Unit with Concentric External Piping for Jet Pump Installation 182
Figure 20. Weld-on Pit-less Adapter with Concentric External Piping for "Shallow Well" Pump Installation..... 183
Figure 21. Well Seal for Jet Pump Installation 184
Figure 22. Well Seal for Submersible Pump Installation..... 185
Figure 23. Typical Valve and Box, Manhole Covers, and Piping Installation 186
Figure 24. Suction Feeder 187
Figure 25. Positive Displacement Chlorinator..... 188
Figure 26. Milk-to-Milk Regneration - Homogenizer Upstream from Holding Tube ……...212
Figure 27. Milk-to-Milk Regneration - Booster Pump ……..212
Figure 28. Milk-to-Milk Regneration - Homogenizer and Vacuum Chambers Downstream from Flow-Diversion Device ……..213
Figure 29. HTST System with a Magnetic Flow Meter Using a Constant Speed Centrifugal Pump and a Control Valve ……..213
Figure 30. HTST System with a Magnetic Flow Meter Using an A-C Variable Speed Centrifugal Pump....……214
Figure 31. Controls for Steam Injection Pasteurizer ……...214
Figure 32. Individual Compression-Type Air Supply..... 218
Figure 33. Central Compression-Type Air Supply ……219
Figure 34. Individual Blower-Type Air Supply ……220
Figure 35. Individual Fan-Type Air Supply...……220

Figure 36. Rotating mandrel Assembly …….....221
Figure 37. Culinary Steam Piping Assembly for Steam Infusion or Injection……223
Figure 38. Culinary Steam Piping Assembly for Steam Infusion or Injection
(Optional Configuration)...……...…….....224
Figure 39. Culinary Steam Piping Assembly for Airspace Heating or Defoaming…..……...224
Figure 40. Logic Diagram: HTST Flow-Diversion Device, Divert Valve Stem……...…...240
Figure 41. Logic Diagram: HTST Flow-Diversion Device, Leak Detect Valve Stem…..……. 241
Figure 42. Logic Diagram: HTST Safety Limit Recorder-Controller...….....……242
Figure 43. Logic Diagram: HTST Timing Pump...…….....……243
Figure 44. Logic Diagram: HTST Booster Pump...….....……...244
Figure 45. Pressure Switch Setting…...…….....……286
Figure 46. Vitamin Fortification…..……..…….....……..327
Figure 47. Decision Tree for Using pH, a_w, or the Interaction of pH and a_w to Determine if
a Milk or Milk Product Requires Time/Temperature for Safety…….336

TABLES

Page
Table A. Interaction of pH and a_w for Control of Spores in Milk and Milk Products
Pasteurized to Destroy Pathogenic Vegetative Cells and Subsequently Packaged ……8
Table B. Interaction of pH and a_w for Control of Pathogenic Vegetative Cells and Spores
in Milk and Milk Products not Pasteurized or Pasteurized but not Packaged……9
Table 1. Chemical, Physical, Bacteriological and Temperature Standards..... 28
Table 2. Combinations of Causticity, Time and Temperature, of Equal Bactericidal Value, for
the Soaker Tank of Soaker Type Bottle Washers..... 68
Table 3. Pasteurization Temperature vs. Time ... ……..80
Table 4. Equipment Tests - Batch, HTST, HHST and Aseptic Processing Systems……103
Table 5. Removal of Restrictions when Infection or High Risk of Infection is Discovered 120
Table 6. Slot Size vs. Cattle Age..... 141
Table 7. Gravity Flow Gutter Depth vs. Length for Manure from Lactating Animals..... 141
Table 8. Step Height vs. Length for Stepped Gravity Flow Gutters 142
Table 9. Work Water Volume of Various Sized Pipelines 149
Table 10. Distance of Well from Sources of Contamination 156
Table 11. Example of Enforcement Procedures for Pasteurized Milk Laboratory Examination 189
Table 12. Example of Enforcement Procedures for Raw Milk Laboratory Examinations …….190
Table 13. Sieve Sizes and Designations……...197
Table 14. Holding Tube Length - HHST Pasteurizers - Indirect Heating..... 277
Table 15. Dimension for Standard Stainless Steel Sanitary Tubing..... 278
Table 16. Holding Tube Length, HHST Pasteurizers, Direct Heating…….280

GRADE "A" PASTEURIZED MILK ORDINANCE (*GRADE "A" PMO*)--2005 REVISION

An *Ordinance* defining "milk" and certain "milk products", "milk producer", "pasteurization", etc.; prohibiting the sale of adulterated and misbranded milk and milk products; requiring permits for the sale of milk and milk products; regulating the inspection of dairy farms and milk plants; the examination, labeling, pasteurization, aseptic processing and packaging and distribution and sale of milk and milk products; providing for the construction of future dairy farms and milk plants; the enforcement of this *Ordinance*; and the fixing of penalties.

Be it ordained by the ... of ...[1] as follows:

SECTION 1. DEFINITIONS

Terms used in this document, not specifically defined herein, are those within Title 21, *Code of Federal Regulations* (CFR) and/or the *Federal Food, Drug, and Cosmetic Act* (FFD&CA) as amended.

The following additional definitions shall apply in the interpretation and the enforcement of this *Ordinance*:

A. **ABNORMALITIES OF MILK:**

A-1. **Abnormal Milk:** Milk that is visibly changed in color, odor and/or texture.
A-2. **Undesirable Milk:** Milk that, prior to the milking of the animal, is known to be unsuitable for sale, such as colostrum.
A-3. **Contaminated Milk:** Milk that is un-saleable or unfit for human consumption following treatment of the animal with veterinary products, i.e. antibiotics, which have withhold requirements, or treatment with medicines or insecticides not approved for use on dairy animals by FDA or the Environmental Protection Agency (EPA).

B. **ASEPTIC PROCESSING:** The term "Aseptic Processing", when used to describe a milk product, means that the product has been subjected to sufficient heat processing and packaged in a hermetically sealed container, to conform to the applicable requirements of 21 CFR 113 (Refer to the Reference in Appendix L.) and the provisions of Section 7, Item 16p of this *Ordinance,* and to maintain the commercial sterility of the product under normal non-refrigerated conditions.

C. **AUTOMATIC MILKING INSTALLATION (AMI):** The term automatic milking installation covers the entire installation of one (1) or more automatic milking units, including the hardware and software utilized in the operation of individual automatic milking units, the animal selection system, the automatic milking machine, the milk cooling system, the system for cleaning and sanitizing the automatic milking unit, the teat cleaning system, and the alarm systems associated with the process of milking, cooling, cleaning and sanitation.

D. **BULK MILK HAULER/SAMPLER:** A bulk milk hauler/sampler is any person who collects official samples and may transport raw milk from a farm and/or raw milk products to or from a milk plant, receiving station or transfer station and has in their possession a permit from any State to sample such products.

E. **BULK MILK PICKUP TANKER:** A bulk milk pickup tanker is a vehicle, including the truck, tank and those appurtenances necessary for its use, used by a bulk milk hauler/sampler to transport bulk raw milk for pasteurization from a dairy farm to a milk plant, receiving station, or transfer station.

F. **BUTTERMILK:** Buttermilk is a fluid product resulting from the manufacture of butter from milk or cream. It contains not less than 8¼ percent of milk solids not fat.

F-1. **Grade "A" Dry Buttermilk:** Grade "A" dry buttermilk means dry buttermilk, which complies with the applicable provisions of this *Ordinance.*

F-2. **Grade "A" Dry Buttermilk Products:** Grade "A" dry buttermilk products means dry buttermilk products, which complies with the applicable provisions of this *Ordinance*.

F-3. **Concentrated (Condensed) Buttermilk:** Concentrated (condensed) buttermilk is the product resulting from the removal of a considerable portion of water from buttermilk.

F-4. **Grade "A" Concentrated (Condensed) and Dry Buttermilk and Buttermilk Products:** Grade "A" concentrated (condensed) and dry buttermilk and buttermilk products means concentrated (condensed) or dry buttermilk and buttermilk products, which comply with the applicable provisions of this *Ordinance*. The words "concentrated (condensed) and dry milk products" shall be interpreted to include concentrated (condensed) and dry buttermilk and buttermilk products.

G. **CLEAN:** Direct product contact surfaces that have had the effective and thorough removal of product and/or contaminants.

H. **COMMON NAME:** The generic term commonly used for domestic animals, i.e., cattle, goats, sheep, horses, water buffalo, etc. (Refer to the **NOTE:** on page 26.)

I. **CONCENTRATED (CONDENSED) MILK:** Concentrated (condensed) milk is a fluid product, unsterilized and unsweetened, resulting from the removal of a considerable portion of the water from the milk, which when combined with potable water in accordance with instructions printed on the container label, results in a product conforming with the milkfat and milk solids not fat levels of milk as defined in this Section.

I-1. **Concentrated (Condensed) Milk Products:** Concentrated (condensed) milk products shall be taken to mean and to include homogenized concentrated (condensed) milk, concentrated (condensed) skim milk, concentrated (condensed) reduced fat or lowfat milk, and similar concentrated (condensed) products made from concentrated (condensed) milk or concentrated (condensed) skim milk, which when combined with potable water in accordance with instructions printed on the container label, conform with the definitions of the corresponding milk products in this Section.

I-2. **Grade "A" Concentrated (Condensed) Skim Milk:** Grade "A" concentrated (condensed) skim milk means concentrated (condensed) skim milk, which complies with the applicable provisions of this *Ordinance.*

J. **COOLING POND:** A cooling pond is a man-made structure designed for the specific purpose of cooling cows.

K. **DAIRY FARM:** A dairy farm is any place or premises where one (1) or more lactating animals (cows, goats, sheep, water buffalo, or other hooved mammal) are kept for milking purposes, and from which a part or all of the milk or milk product(s) is provided, sold or offered for sale to a milk plant, receiving station or transfer station. (Refer to the **NOTE:** on page 26.)

L. **DAIRY PLANT SAMPLER:** A person responsible for the collection of official samples for regulatory purposes outlined in Section 6 of this *Ordinance*. This person is an employee of the Regulatory Agency and is evaluated at least once every two (2)-year period by a State Sampling Surveillance Officer or a properly delegated Sampling Surveillance Regulatory Official.

M. **EGGNOG OR BOILED CUSTARD:** Eggnog or boiled custard is the product defined in 21 CFR 131.170.

N. FOOD ALLERGENS: Are proteins in foods that are capable of inducing an allergic reaction or response in some individuals.

Reference: Food Allergen Labeling and Consumer Protection Act of 2004 (Public Law 108-282) and Information about Food Allergens–http://www.cfsan.fda.gov/~dms/wh-alrgy.html.

O. **FROZEN MILK CONCENTRATE:** Frozen milk concentrate is a frozen milk product with a composition of milk fat and milk solids not fat in such proportions that when a given volume of concentrate is mixed with a given volume of water the reconstituted product conforms to the milk fat and milk solids not fat requirements of whole milk. In the manufacturing process, water may be used to adjust the primary concentrate to the final desired concentration. The adjusted primary concentrate is pasteurized, packaged, and immediately frozen. This product is stored, transported and sold in the frozen state.

P. **GOAT MILK:** Goat milk is the normal lacteal secretion, practically free of colostrum, obtained by the complete milking of one (1) or more healthy goats. Goat milk sold in retail packages shall contain not less than 2½ percent milk fat and not less than 7½ percent milk solids not fat. Goat milk shall be produced according to the sanitary standards of this *Ordinance*. The word "milk" shall be interpreted to include goat milk.

Q. **HACCP DEFINITIONS:** (For use in conjunction with Appendix K.)

Q-1. **AUDIT:** An evaluation of the entire milk plant, receiving station or transfer station facility and NCIMS HACCP System to ensure compliance with the NCIMS HACCP System and other NCIMS regulatory requirements.

Q-2. **CENTRALIZED DEVIATION LOG:** A centralized log or file identifying data detailing any deviation of critical limits and the corrective actions taken as required in Appendix K.

Q-3. **CONTROL:**

a. To manage the conditions of an operation to maintain compliance with established criteria.

b. The state where correct procedures are being followed and criteria are being met.

Q-4. **CONTROL MEASURE:** Any action or activity that can be used to prevent, eliminate, or reduce a significant hazard that is managed at a Critical Control Point.

Q-5. **CORRECTIVE ACTION:** Procedures followed when a deviation occurs.

Q-6. **CRITICAL CONTROL POINT (CCP):** A step at which control can be applied and is essential to prevent or eliminate a milk or milk product safety hazard or reduce it to an acceptable level.

Q-7. **CRITICAL LIMIT (CL):** A maximum and/or minimum value to which a biological, chemical, or physical parameter must be controlled at a CCP to prevent, eliminate, or reduce to an acceptable level the occurrence of a milk or milk product safety hazard.

Q-8. **CRITICAL LISTING ELEMENT (CLE):** An item on the MILK PLANT, RECEIVING STATION OR TRANSFER STATION NCIMS HACCP SYSTEM AUDIT REPORT identified with a double star (**). The marking of a CLE by a State Rating Officer or FDA auditor, indicates a condition that constitutes a major dysfunction likely to result in a potential compromise to milk or milk product safety, or that violate NCIMS requirements regarding drug residue testing and traceback or raw milk sources, whereby a listing may be denied or withdrawn.

Q-9. **DAIRY HACCP CORE CURRICULUM:** The core curriculum consists of:

a. Basic HACCP training; plus

b. An orientation to the requirements of the NCIMS HACCP Program.

Q-10. **DEFICIENCY:** An element inadequate or missing from the requirements of the HACCP System or Appendix K.

Q-11. **DEVIATION:** A failure to meet a CL.

Q-12. **HAZARD ANALYSIS CRITICAL CONTROL POINT (HACCP):** A systematic approach to the identification, evaluation, and control of significant milk or milk product safety hazards.

Q-13. **HACCP PLAN:** The written document, which is based upon the principles of HACCP and delineates the procedures to be followed.

Q-14. **HACCP SYSTEM:** The implemented HACCP Plan and Prerequisite Program, including other applicable NCIMS requirements.

Q-15. **HACCP TEAM:** The group of people who are responsible for developing, implementing, and maintaining the HACCP System.

Q-16. **HAZARD:** A biological, chemical, or physical agent that is reasonably likely to cause illness or injury in the absence of its control.

Q-17. **HAZARD ANALYSIS:** The process of collecting and evaluating information on hazards associated with the milk under consideration, to decide which are reasonably likely to occur and must be addressed in the HACCP Plan.

Q-18. **MONITOR:** To conduct a planned sequence of observations or measurements to assess whether a CCP is under control or to assess the conditions and practices of all required Prerequisite Programs.

Q-19. **NON-CONFORMITY:** A failure to meet specified requirements of the HACCP System as described in Appendix K.
Q-20. **POTENTIAL HAZARD:** Any hazard to be evaluated by the hazard analysis.
Q-21. **PREREQUISITE PROGRAMS (PPs):** Procedures, including Good Manufacturing Practices (GMPs), which address operational conditions that provide the foundation for the HACCP System. The required PPs specified in Appendix K. are sometimes called Sanitary Standard Operating Procedures (SSOPs) in other HACCP Systems.
Q-22. **VALIDATION:** The element of verification focused on collecting and evaluating scientific and technical information to determine whether the HACCP Plan, when properly implemented, will effectively control the hazards.
Q-23. **VERIFICATION:** Those activities, other than monitoring, that determine the validity of the HACCP Plan and that the HACCP System is operating according to the plan.

R. **HOOVED MAMMALS MILK:** Hooved mammals milk is the normal lacteal secretion, practically free of colostrum, obtained by the complete milking of one (1) or more healthy hooved mammals. This product shall be produced according to the sanitary standards of this *Ordinance*. (Refer to the **NOTE:** on page 26)

S. **INDUSTRY PLANT SAMPLER:** A person responsible for the collection of official samples for regulatory purposes at a milk plant, receiving station or transfer station as outlined in Appendix N. This person is an employee of the milk plant, receiving station or transfer station and is evaluated at least once every two (2) year period by a State Sampling Surveillance Officer or a properly delegated Sampling Surveillance Regulatory Official.

T. **MILK DISTRIBUTOR:** A milk distributor is any person who offers for sale or sells to another any milk or milk products.

U. **MILK PLANT:** A milk plant is any place, premises; or establishment where milk or milk products are collected, handled, processed, stored, pasteurized, ultra-pasteurized, aseptically processed, condensed, dried, packaged, or prepared for distribution.

V. **MILK PRODUCER:** A milk producer is any person who operates a dairy farm and provides, sells or offers milk for sale to a milk plant, receiving station or transfer station.

W. **MILK PRODUCTS:** Milk products include cream, light cream, light whipping cream, heavy cream, heavy whipping cream, whipped cream, whipped light cream, sour cream, acidified sour cream, cultured sour cream, half-and-half, sour half-and-half, acidified sour half-and-half, cultured sour half-and-half, reconstituted or recombined milk and milk products, concentrated (condensed) milk, concentrated (condensed) milk products, concentrated (condensed) and dry milk products, nonfat (skim) milk, reduced fat or lowfat milk, frozen milk concentrate, eggnog, buttermilk, buttermilk products, whey, whey products, cultured milk, cultured reduced fat or loft milk, cultured nonfat (skim) milk, yogurt, lowfat yogurt, nonfat yogurt, acidified milk, acidified reduced fat or lowfat milk, acidified nonfat (skim) milk, low-sodium milk, low-sodium reduced fat or lowfat milk, low-sodium nonfat (skim) milk, lactose-reduced milk, lactose-reduced reduced fat or lowfat milk, lactose-reduced nonfat (skim) milk, aseptically processed and packaged milk and milk products as defined in this Section, milk, reduced fat, lowfat milk or

nonfat (skim) milk with added safe and suitable microbial organisms and any other milk product made by the addition or subtraction of milkfat or addition of safe and suitable optional ingredients for protein, vitamin or mineral fortification of milk products defined herein.[2,3]

Milk products also include those dairy foods made by modifying the federally standardized products listed in this Section in accordance with 21 CFR 130.10-Requirements for foods named by use of a nutrient content claim and a standardized term.

This Definition shall include those milk and milk products, as defined herein, which have been aseptically processed and then packaged.

Milk and milk products which have been retort processed after packaging or which have been concentrated (condensed) or dried are included in this Definition only if they are used as an ingredient to produce any milk or milk product defined herein or if they are labeled as Grade "A" as described in Section 4.

Powdered dairy blends may be labeled Grade "A" and used as ingredients in Grade "A" dairy products, such as cottage cheese dressing mixes or starter media for cultures used to produce various Grade "A" cultured products, if they meet the requirements of this *Ordinance*. If used as an ingredient in Grade "A" products, such as those listed above, blends of dairy powders must be blended under conditions, which meet all applicable Grade "A" requirements. Grade "A" powder blends must be made from Grade "A" powdered dairy products, except that small amounts of functional ingredients, (total of all such ingredients shall not exceed 5% by weight of the finished blend) which are not Grade "A" are allowed in Grade "A" blends when the finished ingredient is not available in Grade "A" form, i.e., sodium caseinate. This is similar to the existing FDA position that such dairy ingredient in small cans of freeze-dried starter culture need not be Grade "A".

This definition is not intended to include dietary products (except as defined herein), infant formula, ice cream or other frozen desserts, butter or cheese.

W-1. **Dry Milk Products:** Dry milk products mean products resulting from the drying of milk or milk products and any product resulting from the combination of dry milk products with other wholesome dry ingredients.

W-2. **Grade "A" Dry Milk Products:** Grade "A" dry milk products mean dry milk products, which comply with the applicable provisions of this *Ordinance.*

X. **MILK TANK TRUCK:** A milk tank truck is the term used to describe both a bulk milk pickup tanker and a milk transport tank.

Y. **MILK TANK TRUCK CLEANING FACILITY:** Any place, premises, or establishment, separate from a milk plant, receiving station or transfer station, where a milk tank truck is cleaned and sanitized.

Z. **MILK TANK TRUCK DRIVER:** A milk tank truck driver is any person who transports raw or pasteurized milk or milk products to or from a milk plant, receiving station or transfer station. Any transportation of a direct farm pickup requires the milk tank truck driver to have responsibility for accompanying official samples.

AA. **MILK TRANSPORT TANK:** A milk transport tank is a vehicle, including the truck and tank, used by a bulk milk hauler/sampler to transport bulk shipments of milk and milk products,

from a milk plant, receiving station or transfer station to another milk plant, receiving station or transfer station.

BB. **MILK TRANSPORTATION COMPANY:** A milk transportation company is the person responsible for a milk tank truck(s).

CC. **OFFICIAL LABORATORY:** An official laboratory is a biological, chemical or physical laboratory, which is under the direct supervision of the Regulatory Agency.

DD. **OFFICIALLY DESIGNATED LABORATORY:** An officially designated laboratory is a commercial laboratory authorized to do official work by the Regulatory Agency, or a milk industry laboratory officially designated by the Regulatory Agency for the examination of producer samples of Grade "A" raw milk for pasteurization and commingled milk tank truck samples of raw milk for drug residues and bacterial limits.

EE. **PASTEURIZATION:** The terms "pasteurization", "pasteurized" and similar terms shall mean the process of heating every particle of milk or milk product, in properly designed and operated equipment, to one (1) of the temperatures given in the following chart and held continuously at or above that temperature for at least the corresponding specified time:

Temperature	Time
63ºC (145ºF)*	30 minutes
72ºC (161ºF)*	15 seconds
89ºC (191ºF)	1.0 second
90ºC (194ºF)	0.5 seconds
94ºC (201ºF)	0.1 seconds
96ºC (204ºF)	0.05 seconds
100ºC (212ºF)	0.01 seconds

*If the fat content of the milk product is ten percent (10%) or greater, or a total solids of 18% or greater, or if it contains added sweeteners, or if it is concentrated (condensed), the specified temperature shall be increased by 3ºC (5ºF).

Provided, that eggnog shall be heated to at least the following temperature and time specifications:

Temperature	Time
69ºC (155ºF)	30 minutes
80ºC (175ºF)	25 seconds
83ºC (180ºF)	15 seconds

Provided further, that nothing shall be construed as barring any other pasteurization process, which has been recognized by FDA to be equally efficient and which is approved by the Regulatory Agency.

FF. **PERSON:** The word "person" shall include any individual, milk plant operator, partnership, corporation, company, firm, trustee, association or institution.

GG. **RECEIVING STATION:** A receiving station is any place, premises, or establishment where raw milk is received, collected, handled, stored, or cooled and prepared for further transporting.

HH. **RECONSTITUTED OR RECOMBINED MILK AND/OR MILK PRODUCTS:** Reconstituted or recombined milk and/or milk products shall mean milk or milk products defined in this Section which result from reconstituting or recombining of milk constituents with potable water when appropriate.[4]

II. **REGULATORY AGENCY:** The Regulatory Agency shall mean the ... of the …[1]or their authorized representative. The term, "Regulatory Agency", whenever it appears in the *Ordinance* shall mean the appropriate agency having jurisdiction and control over the matters embraced within this *Ordinance*.

JJ. **SANITIZATION:** Is the application of any effective method or substance to properly cleaned surfaces for the destruction of pathogens, and other microorganisms, as far as is practicable. Such treatment shall not adversely affect the equipment, the milk and/or milk product, or the health of consumers, and shall be acceptable to the Regulatory Agency.

KK. **SHEEP MILK:** Sheep milk is the normal lacteal secretion practically free of colostrum, obtained by the complete milking of one (1) or more healthy sheep. Sheep milk shall be produced according to the sanitary standards of this *Ordinance*. The word "milk" shall be interpreted to include sheep milk.

LL. **TIME/TEMPERATURE CONTROL FOR SAFETY OF MILK AND MILK PRODUCTS:** Milk and milk products that require time/temperature control for safety (TCS) to limit pathogenic microorganism growth or toxin formation includes:

1. Milk or milk products that are raw, heat-treated, pasteurized, or ultra-pasteurized; or
2. Except as specified in 3. below of this definition, a milk or milk product that because of the interaction of it's a_w and pH values is designated as Product Assessment (PA) as required in either Table A or B as follows:

Table A. Interaction of pH and a_w for Control of Spores in Milk and Milk Products Pasteurized to Destroy Pathogenic Vegetative Cells and Subsequently Packaged*

A_w values	pH values		
	4.6 or less	> 4.6 – 5.6	> 5.6
0.92 or less	Non-TCS**	Non-TCS	Non-TCS
> 0.92 - .95	Non-TCS	Non-TCS	PA***
> 0.95	Non-TCS	PA	PA

*Refer to Appendix R. for instruction in how to use Table A.

** TCS means TIME/TEMPERATURE CONTROL FOR SAFETY MILK AND MILK PRODUCTS.
*** PA means either that the product needs time and temperature control or further PRODUCT ASSESSMENT is required to determine if the milk or milk product is Non-TCS.

Table B. Interaction of pH and a_w for Control of Pathogenic Vegetative Cells and Spores in Milk and Milk Products not Pasteurized or Pasteurized but not Packaged*				
A_w values	pH values			
	< 4.2	4.2 – 4.6	>4.6 – 5.0	> 5.0
< 0.88	Non-TCS	Non-TCS	Non-TCS	Non-TCS
0.88 – 0.90	Non-TCS	Non-TCS	Non-TCS	PA
> 0.90 – 0.92	Non-TCS	Non-TCS	PA	PA
> 0.92	Non-TCS	PA	PA	PA

* Refer to Appendix R. for instruction in how to use Table B.

This definition does not include:

1. A milk or milk product that because of it's pH or a_w value, or interaction of a_w and pH values, is designated as Non-TCS in Table A or B as specified in 2. above of this definition;
2. A milk or milk products, in an unopened hermetically sealed container, that is commercially processed to achieve and maintain commercial sterility under conditions of non-refrigerated storage and distribution;
3. A milk or milk product for which evidence (acceptable to FDA) demonstrates that time/ temperature control for safety is not required as specified under this definition (such as, a product containing a preservative known to inhibit pathogenic microorganisms, or other barriers to the growth of pathogenic microorganisms, or a combination of barriers that inhibit the growth of pathogenic microorganisms); or
4. A milk or milk product that does not support the growth of pathogenic microorganisms as specified under this definition even though the milk or milk product may contain a pathogenic microorganism or chemical or physical contaminant at a level sufficient to cause illness or injury.

MM. **TRANSFER STATION:** A transfer station is any place, premises, or establishment where milk or milk products are transferred directly from one (1) milk tank truck to another.

NN. **ULTRA-PASTEURIZATION (UP):** The term "Ultra-Pasteurization", when used to describe a dairy product, means that such product shall have been thermally processed at or above 138°C (280°F) for at least two (2) seconds, either before or after packaging, so as to produce a product, which has an extended shelf-life under refrigerated conditions. (Refer to 21 CFR 131.3)

OO. **WATER BUFFALO MILK:** Water buffalo milk is the normal lacteal secretion, practically free of colostrum, obtained by the complete milking of one (1) or more healthy water buffalo. Water buffalo milk shall be produced according to the sanitary standards of this *Ordinance*. The word "milk" shall be interpreted to include water buffalo milk. (Refer to the **NOTE:** on page 26.)

PP. **WHEY PRODUCTS:** Whey products mean any fluid product removed from whey; or made by the removal of any constituent from whey; or by the addition of any wholesome substance to whey or parts thereof.

PP-1. **Grade "A" Whey Products:** Grade "A" whey products means any fluid product removed from whey; or made by the removal of any constituent from whey; or by the addition of any wholesome substance to whey or parts thereof which have been manufactured under the provisions of this *Ordinance*.

PP-2. **Dry Whey Products:** Dry whey products mean products resulting from the drying of whey or whey products and any product resulting from the combination of dry whey products with other wholesome dry ingredients.

PP-3. **Grade "A" Concentrated (Condensed) and Dry Whey and Whey Products:** Grade "A" concentrated (condensed) and dry whey and whey products means concentrated (condensed) or dry whey and whey products, which complies with the applicable provisions of this *Ordinance*. The words "concentrated (condensed) and dry milk products" shall be interpreted to include concentrated (condensed) and dry whey and whey products.

SECTION 2. ADULTERATED OR MISBRANDED MILK OR MILK PRODUCTS

No person shall, within the ... of ...[1], or its jurisdiction, produce, provide, sell, offer, or expose for sale or have in possession with intent to sell any milk or milk product, which is adulterated or misbranded. Provided, that in an emergency, the sale of pasteurized milk and milk products, which do not fully meet the requirements of this *Ordinance*, may be authorized by the Regulatory Agency.

Any adulterated or misbranded milk or milk products, may be impounded by the Regulatory Agency and disposed of in accordance with applicable laws or regulations.

ADMINISTRATIVE PROCEDURES

This Section of the *Ordinance* shall be used in impounding the milk or milk products of, or preferring charges against, persons who adulterate or misbrand their milk or milk products; or label them with any grade designation not authorized by the Regulatory Agency under the terms of this *Ordinance*; or who sell or deliver ungraded milk or milk products, except as may be permitted under this Section in an emergency. An emergency is defined as a general and acute shortage in the milk shed, not simply one (1) distributor's shortage.

SECTION 3. PERMITS

It shall be unlawful for any person who does not possess a permit from the Regulatory Agency of the ... of ...[1] to manufacture, bring into, send into or receive into the ... of ...[1] or its jurisdiction, for sale, or to sell, or offer for sale therein or to have in storage any milk or milk products, defined in this *Ordinance*. Provided, that grocery stores, restaurants, soda fountains and similar

establishments where milk or milk products are served or sold at retail, but not processed may be exempt from the requirements of this Section. Provided further, that brokers, agents, and distributors representing, buying from, and/or selling condensed and dry milk products from or to a milk plant having a valid permit are not required to have a permit.

Only a person who complies with the requirements of this *Ordinance* shall be entitled to receive and retain such a permit. Milk plants, receiving stations and transfer stations permitted under the NCIMS HACCP Program shall meet the applicable provisions of this *Ordinance*, including Appendix K. Permits shall not be transferable with respect to persons and/or locations.

Provided, that the manufacture of condensed and dry milk products, which do not meet the requirements of this *Ordinance* for Grade "A" condensed or dry milk products and which are intended for other uses, shall not be construed to violate the terms of this *Ordinance*, if such products are processed, packaged and stored separately and are plainly identified.

It shall be unlawful for any person to manufacture in a milk plant under a permit for Grade "A" condensed or dry milk products in the...of...[1] or its jurisdiction any condensed and dry milk products which do not meet the requirements of this *Ordinance* for Grade "A" condensed or dry milk products without a permit from the Regulatory Authority who shall require that such condensed and dry milk products be processed, packaged and stored separately from Grade "A" condensed or dry milk products and that each container of such products be plainly marked in such a manner as to prevent confusion of the product with Grade "A" condensed or dry milk products.

The Regulatory Agency shall suspend such permit, whenever it has reason to believe that a public health hazard exists; or whenever the permit holder has violated any of the requirements of this *Ordinance*; or whenever the permit holder has interfered with the Regulatory Agency in the performance of its duties. Provided, that the Regulatory Agency shall, in all cases, except where the milk or milk product involved creates, or appears to create, an imminent hazard to the public health; or in any case of a willful refusal to permit authorized inspection/audit, serve upon the holder a written notice of intent to suspend permit, which notice shall specify with particularity the violation(s) in question and afford the holder such reasonable opportunity to correct such violation as may be agreed to by the parties, or in the absence of agreement, fixed by the Regulatory Agency, before making any order of suspension effective. A suspension of permit shall remain in effect until the violation(s) has been corrected to the satisfaction of the Regulatory Agency.

Upon notification, acceptable to the Regulatory Agency, by any person whose permit has been suspended, or upon application within forty-eight (48) hours of any person who has been served with a notice of intention to suspend, and in the latter case before suspension, the Regulatory Agency shall within seventy-two (72) hours proceed to a hearing to ascertain the facts of such violation(s) or interference and upon evidence presented at such hearing shall affirm, modify or rescind the suspension or intention to suspend.

Upon repeated violation(s), the Regulatory Agency may revoke such permit following reasonable notice to the permit holder and an opportunity for a hearing. This Section is not intended to preclude the institution of court action as provided in Sections 5 and 6.

ADMINISTRATIVE PROCEDURES

ISSUANCE OF PERMITS: Every milk producer, milk distributor, bulk milk hauler/sampler, milk tank truck[5], milk transportation company and each milk plant, receiving station, transfer

station, milk tank truck cleaning facility operator shall hold a valid permit. The permit for a milk tank truck(s) may be issued to the milk transportation company. Milk producers who transport milk or milk products only from their own dairy farms; employees of a milk distributor or milk plant operator who possesses a valid permit; and employees of a milk transportation company that possesses a valid permit and transports milk or milk products from a milk plant, receiving station or transfer station shall not be required to possess a bulk milk hauler/sampler's permit. Grocery stores, restaurants, soda fountains and similar establishments where milk and milk products are served or sold at retail, but not processed, may be exempt from the requirements of this Section.

While compliance with the requirements for Grade "A" condensed and dry milk products is necessary to receive and retain a permit for these products, it is not the intent of this *Ordinance* to limit the production of a milk plant that condenses and/or dries milk or milk products, to Grade "A" products.

The manufacture of ungraded products for other uses in milk plants operating under a permit for the manufacture of Grade "A" condensed and dry milk products is allowed under conditions specified in Section 7 of this *Ordinance* and whereby such products are processed, packaged, and stored separately. In such cases, a second permit is required, which is issued with the understanding that ungraded products will be handled in such a manner so as to avoid confusion with the Grade "A" production.

Either or both permits may be temporarily suspended for the violation of any applicable provision of this *Ordinance*, or revoked for a serious or repeated violation. Suspension of permits for violation of sanitation Items of Section 7 is provided for in Section 5. In addition, the Regulatory Agency may, at any time, institute court action under the provisions of Section 6. There is no specific frequency for the issuance of permits. This should be in accordance with the policies of the Regulatory Agency and in agreement with those employed for the issuance of permits under this *Ordinance*.

SUSPENSION OF PERMIT: When any requirement(s) of this *Ordinance* is violated, the permit holder is subject to the suspension of their permit.

The Regulatory Agency may forego suspension of the permit, provided the milk or milk product in violation is not sold or offered for sale as Grade "A" milk or milk product. A Regulatory Agency may allow the imposition of a monetary penalty in lieu of a permit suspension, provided the milk or milk product in violation is not sold or offered for sale as Grade "A" milk or milk product. Except, that a milk producer may be assessed a monetary penalty in lieu of permit suspension for violative counts provided:

1. If the monetary penalty is due to a violation of the bacterial or cooling temperature standards, the Regulatory Agency shall conduct an inspection of the facility and operating methods and make the determination that the conditions responsible for the violation have been corrected. Samples shall then be taken at the rate of not more than two (2) per week on separate days within a three (3) week period in order to determine compliance with the appropriate standard as determined in accordance with Section 6 of this *Ordinance*.
2. If the monetary penalty is due to a violation of the somatic cell count standard, the Regulatory Agency shall verify that the milk supply is within acceptable limits as prescribed in Section 7 of this *Ordinance*. Samples shall then be taken at the rate of not more than two (2) per week on separate days within a three (3) week period in order to determine

compliance with the appropriate standard as determined in accordance with Section 6 of this *Ordinance*.

HEARINGS: If a State Administrative Procedure Act (APA), which provides procedures for administrative hearings and judicial review of administrative determinations, is available, the APA shall be made applicable by reference to the hearings provided for in the *Ordinance*. If such APA is not available, appropriate procedures, including provision for notice, hearing officer, their authority, record of hearing, rules of evidence and court review shall be established by the appropriate authority.

REINSTATEMENT OF PERMITS: Any permit holder whose permit has been suspended may make written application for the reinstatement of their permit.
When the permit suspension has been due to a violation of any of the bacterial, coliform or cooling temperature standards, the Regulatory Agency, within one (1) week after the receipt of notification for reinstatement of permit, shall issue a temporary permit after determining by an inspection of the facilities and operating methods that the conditions responsible for the violation have been corrected. When a permit suspension has been due to a violation of the somatic cell count standard, the Regulatory Agency may issue a temporary permit whenever a resampling of the herd's milk supply indicates the milk supply to be within acceptable limits as prescribed in Section 7. Samples shall then be taken at the rate of not more than two (2) per week on separate days within a three (3) week period and the Regulatory Agency shall reinstate the permit upon compliance with the appropriate standard as determined in accordance with Section 6 of this *Ordinance*.
Whenever the permit suspension has been due to a violation of a requirement other than bacteriological, coliform, somatic cell count, drug residue test or cooling-temperature standards, the notification shall indicate that the violation(s) has been corrected. Within one (1) week of the receipt of such notification, the Regulatory Agency shall make an inspection/audit of the applicant's facility, and as many additional inspections/audits thereafter as are deemed necessary, to determine that the applicant's facility is complying with the requirements. When the findings justify, the permit shall be reinstated.
When a permit suspension has been due to a positive drug residue, the permit shall be reinstated in accordance with the provisions of Appendix N.

SECTION 4. LABELING

All bottles, containers and packages containing milk or milk products defined in Section 1 of this *Ordinance* shall be labeled in accordance with the applicable requirements of the FFD&CA, the *Nutrition Labeling and Education Act* (NLEA) of 1990, and regulations developed there under, the CFR, and in addition, shall comply with applicable requirements of this Section as follows:

All bottles, containers and packages containing milk or milk products, except milk tank trucks, storage tanks and cans of raw milk from individual dairy farms, shall be conspicuously marked with:

1. The identity of the milk plant where pasteurized, ultra-pasteurized, aseptically processed, condensed and/or dried.
2. The words "keep refrigerated after opening" in the case of aseptically processed milk and milk products.
3. The common name of the hooved mammal producing the milk shall precede the name of the milk or milk product when the product is or is made from other than cattle's milk. As an example, "Goat", "Sheep", "Water Buffalo", or "Other Hooved Mammal" milk or milk products respectively. (Refer to the **NOTE:** on page 26.)
4. The words "Grade "A"" on the exterior surface. Acceptable locations shall include the principal display panel, the secondary or informational panel, or the cap/cover.
5. The word "reconstituted" or "recombined" if the product is made by reconstitution or recombination.
6. In the case of condensed or dry milk products the following shall also apply:
   a. The identity of the Regulatory Agency issuing such permit; and if distributed by another party, the name and address of the distributor shall be shown by a statement, such as "Distributed by".
   b. A code or lot number identifying the contents with a specific date, run, or batch of the product, and the quantity of the contents of the container.

All vehicles and milk tank trucks containing milk or milk products shall be legibly marked with the name and address of the milk plant or hauler in possession of the contents.
Milk tank trucks transporting raw, heat-treated or pasteurized milk and milk products to a milk plant from another milk plant, receiving station or transfer station are required to be marked with the name and address of the milk plant or hauler and shall be sealed; in addition, for each such shipment, a shipping statement shall be prepared containing at least the following information:

1. Shipper's name, address and permit number. Each milk tank truck containing milk shall include the IMS Bulk Tank Unit (BTU) identification number(s) or the IMS Listed Milk Plant Number, for farm groups listed with a milk plant, on the weight ticket or manifest.
2. Permit identification of hauler, if not an employee of the shipper.
3. Point of origin of shipment.
4. Tanker identification number.
5. Name of product.
6. Weight of product.
7. Temperature of product when loaded.
8. Date of shipment.
9. Name of supervising Regulatory Agency at the point of origin of shipment.
10. Whether the contents are raw, pasteurized, or in the case of cream, lowfat or skim milk, whether it has been heat-treated.
11. Seal number on inlet, outlet, wash connections and vents.
12. Grade of product.

All cans of raw milk from individual dairy farms shall be identified by the name or number of the individual milk producer.

Each milk tank truck containing milk shall be accompanied by documentation, weigh ticket or manifest, which shall include the IMS BTU Identification Number(s) or the IMS Listed Milk Plant Number, for farm groups listed with a milk plant.

ADMINISTRATIVE PROCEDURES

The purpose of this Section is to require labeling that will permit easy identification of the milk and milk product and its origin. It is required that the milk or milk product be designated by its common or usual name.

LABELING OF EMERGENCY SUPPLIES: When the sale of ungraded milk or milk products is authorized during emergencies, under the terms of Section 2, the label must bear the designation "ungraded". When such labeling is not available, the Regulatory Agency shall take immediate steps to inform the public that the particular supply is "ungraded" and that the supply will be properly labeled as soon as the distributor can obtain the required labels.

IDENTITY LABELING: "Identity", as used in this Section, is defined as the name and address or permit number of the milk plant at which the pasteurization, ultra-pasteurization, aseptic processing, condensing and/or drying takes place. It is recommended that the voluntary national uniform coding system for the identification of milk plants, at which milk and milk products are packaged, be adopted in order to provide a uniform system of codes throughout the country.
In cases where several milk plants are operated by one firm, the common firm name may be utilized on milk bottles, containers and packages. Provided, that the location of the milk plant at which the contents were pasteurized, ultra-pasteurized, aseptically processed, condensed and/or dried is also shown, either directly or by a code. This requirement is necessary in order to enable the Regulatory Agency to identify the source of the pasteurized, ultra-pasteurized, aseptically processed, condensed and/or dried milk or milk products. The street address of the milk plant need not be shown when only one (1) milk plant of a given name is located within the municipality.
The identity labeling requirement may be interpreted as permitting milk plants and persons to purchase and distribute, under their own label, milk and milk products processed and packaged at another milk plant, provided, that the label reads, "Processed at ... (name and address)", or that the processing and packaging milk plant is identified by a proper code.

MISLEADING LABELS: The Regulatory Agency shall not permit the use of any misleading marks, words or endorsements upon the label. They may permit the use of registered trade designs or similar terms on the bottle cap or label, when in their opinion, they are not misleading and are not so used as to obscure the labeling required by this *Ordinance*. For dry milk products, the outer bag must be preprinted "Grade "A" before filling. The use of super grade designations shall not be permitted. However, this should not be construed as prohibiting the use of official grade designations awarded to dry milk products by the United States Department of Agriculture (USDA). Grade designations such as “Grade "AA" Pasteurized”, “Selected Grade "A" Pasteurized”, “Special Grade "A" Pasteurized”, etc., give the consumer the impression that such a grade is significantly safer than Grade “A”. Such an implication is false, because the *Ordinance* requirements for Grade “A” pasteurized, ultra-pasteurized, or aseptically processed milk when properly enforced, will ensure that this grade of milk will be as safe as milk can

practically be made. Descriptive labeling terms must not be used in conjunction with the Grade "A" designation or name of the milk or milk product and must not be false or misleading.

SECTION 5. INSPECTION OF DAIRY FARMS AND MILK PLANTS

Each dairy farm, milk plant, receiving station, transfer station, milk tank truck cleaning facility whose milk or milk products are intended for consumption within ...of...[1] or it's jurisdiction, and each bulk milk hauler/sampler who collects samples of raw milk for pasteurization, for bacterial, chemical or temperature standards and hauls milk from a dairy farm to a milk plant, receiving station or transfer station and each milk tank truck and its appurtenances shall be inspected/audited by the Regulatory Agency prior to the issuance of a permit. Following the issuance of a permit, the Regulatory Agency shall:

1. Inspect each milk tank truck and its appurtenances used by a bulk milk hauler/sampler who collects samples of raw milk for pasteurization for bacterial, chemical or temperature standards and hauls milk from a dairy farm to a milk plant, receiving station or transfer station, at least once every twelve (12) months.
2. Inspect each bulk milk hauler/sampler's, dairy plant sampler's and industry plant sampler's pickup and sampling procedures at least once every twenty-four (24) months.
3. Inspect each milk plant and receiving station at least once every three (3) months, except that, for those milk plants and receiving stations that have HACCP Systems, which are regulated under the NCIMS HACCP Program, regulatory audits shall replace the regulatory inspections described in this Section. The requirements and minimum frequencies for these regulatory audits are specified in Appendix K.
4. Inspect each milk tank truck cleaning facility and transfer station at least once every six (6) months, except that, for those transfer stations that have HACCP Systems, which are regulated under the NCIMS HACCP Program, regulatory audits shall replace the regulatory inspections described in this Section. The requirements and minimum frequencies for these regulatory audits are specified in Appendix K.
5. Inspect each dairy farm at least once every six (6) months.[6]

Should the violation of any requirement set forth in Section 7, or in the case of a bulk milk hauler/sampler, industry plant sampler or milk tank truck also Section 6 and Appendix B, be found to exist on an inspection/audit, a second inspection/audit shall be required after the time deemed necessary to remedy the violation, but not before three (3) days. This second inspection/audit shall be used to determine compliance with the requirements of Section 7 or in the case of a bulk milk hauler/sampler, industry plant sampler or milk tank truck also Section 6 and Appendix B. Any violation of the same requirement of Section 7, or in the case of a bulk milk hauler/sampler or milk tank truck also Section 6 and Appendix B, on such second inspection/audit, shall call for permit suspension in accordance with Section 3 and/or court action or in the case of an industry plant sampler, shall cease the collection of official regulatory samples until successfully re-trained and re-evaluated by the Regulatory Agency. Provided, that when the Regulatory Agency finds that a critical processing element violation involving:

1. Proper pasteurization, whereby every particle of milk or milk product may not have been heated to the proper temperature and held for the required time in properly designed and operated equipment;
2. A cross-connection exists whereby direct contamination of pasteurized milk or milk product is occurring; or
3. Conditions exist whereby direct contamination of pasteurized milk or milk product is occurring.

The Regulatory Agency shall take immediate action to prevent further movement of such milk or milk product until such violations of critical processing element(s) have been corrected. Should correction of such critical processing element(s) not be accomplished immediately, the Regulatory Agency shall take prompt action to suspend the permit as provided for in Section 3 of this *Ordinance.* Provided, that in the case of milk plants producing aseptically processed milk and milk products, when an inspection of the milk plant and its records reveal that the process used has been less than the required scheduled process, it shall be considered an imminent hazard to public health and the Regulatory Agency shall take immediate action to suspend the permit of the milk plant for the sale of aseptically processed milk and milk products in conformance with Section 3 of this *Ordinance*.
One (1) copy of the inspection/audit report shall be handed to the operator, or other responsible person or be posted in a conspicuous place on an inside wall of the establishment. Said inspection/audit report shall not be defaced and shall be made available to the Regulatory Agency upon request. An identical copy of the inspection/audit report shall be filed with the records of the Regulatory Agency.
The Regulatory Agency shall also make such other inspections and investigations as are necessary for the enforcement of this *Ordinance*.
Every permit holder shall, upon the request of the Regulatory Agency, permit access of officially designated persons to all parts of their establishment or facilities to determine compliance with the provisions of this *Ordinance*. A distributor or milk plant operator shall furnish the Regulatory Agency, upon request, for official use only, a true statement of the actual quantities of milk and milk products of each grade purchased and sold, a list of all sources of such milk and milk products, records of inspections, tests and pasteurization time and temperature records.
It shall be unlawful for any person who, in an official capacity, obtains any information under the provisions of this *Ordinance*, which is entitled to protection as a trade secret, including information as to the quantity, quality, source or disposition of milk or milk products or results of inspections/audits or tests thereof, to use such information to their own advantage or to reveal it to any unauthorized person.

ADMINISTRATIVE PROCEDURES

INSPECTION FREQUENCY: For the purposes of determining the inspection frequency for dairy farms and transfer stations the interval shall include the designated six (6) month period plus the remaining days of the month in which the inspection is due.
For the purposes of determining the inspection frequency for milk plants and receiving stations the interval shall include the designated three (3) month period plus the remaining days of the month in which the inspection is due.

One (1) milk tank truck inspection every twelve (12) months, or bulk milk hauler/sampler's or industry plant sampler's pickup and sampling procedures inspection each twenty-four (24) months, or one (1) producer, transfer station, or milk tank truck cleaning facility inspection every six (6) months, or one (1) milk plant or receiving station inspection every three (3) months is not a desirable frequency, it is instead a legal minimum. Bulk milk hauler/samplers, industry plant samplers, milk tank trucks, milk tank truck cleaning facilities, dairy farms, milk plants, receiving stations and transfer stations experiencing difficulty meeting requirements should be visited more frequently. Milk plants that condense and/or dry milk or milk products and which operate for a short duration of time or intermittent periods of time should also be inspected more frequently. Inspections of dairy farms shall be made at milking time as often as possible and of milk plants at different times of the day in order to ascertain if the processes of equipment assembly, sanitizing, pasteurization, cleaning and other procedures comply with the requirements of this *Ordinance*.

For the purpose of determining the minimum audit frequency for milk plants, receiving stations and transfer stations regulated under the NCIMS HACCP Program the interval shall include the remaining days of the month in which the audit is due.

ENFORCEMENT PROCEDURES: This Section provides that a dairy farm, bulk milk hauler/sampler, milk tank truck, milk tank truck cleaning facility, milk plant, receiving station, transfer station or distributor, except those processing aseptically processed milk and milk products, shall be subject to suspension of permit and/or court action if two (2) successive inspections disclose a violation of the same requirement.

Experience has demonstrated that strict enforcement of the *Ordinance* leads to a better and friendlier relationship between the Regulatory Agency and the milk industry than does a policy of enforcement, which seeks to excuse violations and to defer penalty thereof. The sanitarian's criterion of satisfactory compliance should be neither too lenient nor unreasonably stringent. When a violation is discovered, the sanitarian should point out to the milk producer, bulk milk hauler/sampler, industry plant sampler, responsible person for the milk tank truck, milk tank truck cleaning facility, milk plant, receiving station, transfer station or distributor the requirement that has been violated, discuss a method for correction and set a time for correcting the violated requirement.

The penalties of suspension or revocation of permit and/or court action are provided to prevent continued violation of the provisions of this *Ordinance* but are worded to protect the dairy industry against unreasonable or arbitrary action. When a condition is found which constitutes an imminent health hazard, prompt action is necessary to protect the public health; therefore, the Regulatory Agency is authorized in Section 3, to suspend the permit immediately. However, except for such emergencies, no penalty is imposed on the milk producer, bulk milk hauler/sampler, responsible person for the milk tank truck, milk tank truck cleaning facility, milk plant, receiving station, transfer station or distributor upon the first violation of any of the sanitation requirements listed in Section 7. A milk producer, bulk milk hauler/sampler, responsible person for the milk tank truck, milk tank truck cleaning facility, milk plant, receiving station, transfer station or distributor found violating any requirement must be notified in writing and given a reasonable time to correct the violation(s) before a second inspection is made, but not before three (3) days. The requirement of giving written notice shall be deemed to have been satisfied by the handing to the operator or by the posting of an inspection report, as required by this Section. After receipt of a notice of violation, but before the allotted time has elapsed, the

milk producer, bulk milk hauler/sampler, responsible person for the milk tank truck, milk tank truck cleaning facility, milk plant, receiving station, transfer station or distributor shall have an opportunity to appeal the sanitarian's interpretation to the Regulatory Agency or request an extension of the time allowed for correction.

ENFORCEMENT PROCEDURES - ASEPTIC PROCESSING MILK PLANTS: Because aseptically processed milk and milk products are stored at room temperature and are not refrigerated after processing they must be considered an imminent hazard to public health whenever it is revealed by an inspection or a review of the processing records that the process is less than the required scheduled process and the products produced have not maintained their commercial sterility. Prompt action by the Regulatory Agency to suspend the permit must be initiated in order to protect the public health. The Regulatory Agency shall stop the sale of all under-processed milk or milk product and follow at least the minimum requirements of 21 CFR 113.89 before releasing any product. (Refer to Appendix L.)

CERTIFIED INDUSTRY INSPECTION: The Regulatory Agency may certify industry personnel, with their consent, to carry out cooperatively the provisions of this *Ordinance* with respect to the supervision of dairy farms, bulk milk haul/sampler's pickup and sampling procedures, and/or milk tank trucks. States utilizing certified industry inspections shall have on file and available for review, a written program that describes how the requirements of this *Ordinance* and related documents shall be implemented. Delegation of the inspection and evaluation of bulk milk hauler/sampler's pickup and sampling procedures shall be done by the Sampling Surveillance Officer (SSO) in accordance with the *Evaluation of Milk Laboratories* (EML).

Reports of all inspections conducted by such personnel to determine compliance with the provisions of this *Ordinance* shall be maintained by the industry at a location acceptable to the Regulatory Agency. The Certified Industry Inspector may perform all punitive actions and all inspections for the issuance or reinstatement of permits. Initial inspections and change of market inspections are required and shall be conducted by the Regulatory Agency in conjunction with the Certified Industry Inspector.

When a producer changes market, the producer records for the preceding twenty-four (24) months shall be transferred with the producer, through the Regulatory Agency, and will continue to be a part of the producer’s record.

Industry personnel shall be certified every three (3) years by the Regulatory Agency.

At least annually, the Certified Industry Inspector shall attend an educational seminar provided by the Regulatory Agency, or equivalent training acceptable to the Regulatory Agency.

At least once in each six (6) month period, the Regulatory Agency shall inspect the records maintained by the Industry for the Certified Industry Inspection Program and conduct farm field work to assure the program meets the provisions of the Regulatory Agency's written plan and requirements of this *Ordinance* and related documents.

Initial certification by the Regulatory Agency shall not be made during the course of an official inspection. Re-certification by the Regulatory Agency may be conducted during the course of an official inspection.

Purpose of Certification: The purpose of certification is to have the applicant formally demonstrate their inspection ability to apply proper interpretations of this *Ordinance,* related documents, and the Regulatory Agency's procedures.

Designation of Individuals to Be Certified: Candidates shall submit requests for certification to the Regulatory Agency. The applicant for certification shall have had experience in the field of milk sanitation, and shall be an employee of a milk plant, a producer association, officially designated laboratory or shall be employed on a consulting basis.

Recording of Qualification Data: Prior to conducting the certification procedure, background information shall be secured on the applicant. This shall include academic training, experience in milk sanitation and related fields, in-service courses attended, etc. This information is to be retained by the Regulatory Agency as part of the applicant's file, along with appropriate records of the applicant's performance during the certification examination.

Field Procedure: Only one (1) applicant shall be certified at a time. The certification is to be conducted without prompting from the Regulatory Agency or comparison of inspection results in any way until the entire procedure is completed. Initial certification shall not be made during the course of an official inspection by the Regulatory Agency.
At least twenty-five (25) randomly selected dairy farms and/or five (5) milk tank trucks shall be visited. After the necessary inspections have been completed, the Regulatory Agency shall compare their results with those of the candidate. The percentage agreement for each Item of sanitation shall be determined by dividing the number of agreements by the total number of dairy farms and/or milk tank trucks inspected.

Criteria for Certification: In order to be certified, an industry inspector shall agree with the Regulatory Agency eighty percent (80%) of the time on individual Items of sanitation and shall further agree to comply with the administrative procedures established by the Regulatory Agency for the program of dairy farm and/or milk tank truck supervision. The Regulatory Agency should allow sufficient time to discuss the findings with the applicant.

Duration of Certification: Certification of industry inspection personnel shall be for a period not exceeding three (3) years from the date of formal certification or re-certification, unless revoked.

Re-Certification: The Regulatory Agency shall notify the certified industry inspector of the need for certification renewal at least sixty (60) days prior to its expiration. If re-certification is desired, the inspector will make appropriate arrangements for the renewal procedure. Re-certification can be made for the succeeding three (3) year period, by following the procedures outlined above. Provided, that re-certification may be conducted during the course of an official inspection by the Regulatory Agency.

Reports and Records: Upon satisfactory completion of certification or re-certification, the certified industry inspector shall be issued a certificate. The milk plant(s) or officially designated laboratory(ies) employing the inspector shall be formally notified by letter of the certification. The letter shall outline the purpose of the certification and the conditions under which the

certification may be retained. A copy of the notification letter, together with a copy of the qualification data above and a resume of the percentage agreement on individual items, shall be retained by the Regulatory Agency.

Revocation of Certification: The certification of an industry inspector may be revoked by the Regulatory Agency upon a finding that the inspector is:

1. Not in agreement with the Regulatory Agency at least eighty percent (80%) of the time on Items of sanitation in a field examination conducted as described in the **Field Procedure** outlined above; or
2. Not complying with the established administrative procedures of the Regulatory Agency for the program; or
3. Failing to carry out the provisions of this *Ordinance* in the course of the inspector's work.

INSPECTION/AUDIT REPORTS: A copy of the inspection/audit report shall be filed as directed by the Regulatory Agency and retained for at least twenty-four (24) months. The results shall be entered on appropriate ledger forms. The use of a computer or other information retrieval system may be used. Examples of field inspection/audit forms are identified in Appendix M.

SECTION 6. THE EXAMINATION OF MILK AND MILK PRODUCTS

It shall be the responsibility of the bulk milk hauler/sampler to collect a representative sample of milk from each farm bulk tank or from a properly installed and operated in-line-sampler, that is approved for use by the Regulatory Agency and FDA to collect representative samples, prior to transferring milk from a farm bulk tank, truck or other container. All samples shall be collected and delivered to a milk plant, receiving station, transfer station or other location approved by the Regulatory Agency.

1. During any consecutive six (6) months, at least four (4) samples of raw milk for pasteurization shall be collected from each producer, in at least four (4) separate months, except when three (3) months show a month containing two (2) sampling dates separated by at least twenty (20) days. These samples shall be obtained under the direction of the Regulatory Agency or shall be taken from each producer under the direction of the Regulatory Agency and delivered in accordance with this Section.

2. During any consecutive six (6) months, at least four (4) samples of raw milk for pasteurization, ultra-pasteurization or aseptic processing, shall be collected in at least four (4) separate months, except when three (3) months show a month containing two (2) sampling dates separated by at least twenty (20) days. These samples shall be obtained by the Regulatory Agency, from each milk plant after receipt of the milk by the milk plant and prior to pasteurization, ultra-pasteurization or aseptic processing.

3. During any consecutive six (6) months, at least four (4) samples of heat-treated milk products, from milk plants offering such products for sale, shall be collected by the Regulatory

Agency in at least four (4) separate months, except when three (3) months show a month containing two (2) sampling dates separated by at least twenty (20) days.

4. During any consecutive six (6) months, at least four (4) samples of pasteurized milk, flavored milk, flavored reduced fat or low fat milk, flavored nonfat (skim) milk, each fat level of reduced fat or low fat milk and each milk product defined in this *Ordinance*, shall be collected by the Regulatory Agency in at least four (4) separate months, except when three (3) months show a month containing two (2) sampling dates separated by at least twenty (20) days from every milk plant. All pasteurized (including Aseptically Processed and Ultra-Pasteurized) milk and milk products required sampling and testing is to be done only when there are test methods available that are validated by FDA and accepted by the NCIMS. Products with no validated and accepted methods are not required to be tested.

NOTE: If the production of any Grade "A" condensed or dry milk product as defined in this *Ordinance* is not on a yearly basis, at least five (5) samples shall be taken within a continuous production period.

Samples of milk and milk products shall be taken while in the possession of the producer, milk plant or distributor at any time prior to delivery to the store or consumer. Samples of milk and milk products from dairy retail stores, food service establishments, grocery stores and other places where milk and milk products are sold shall be examined periodically as determined by the Regulatory Agency and the results of such examination shall be used to determine compliance with Sections 2, 4 and 10. Proprietors of such establishments shall furnish the Regulatory Agency, upon request, with the names of all distributors from whom milk or milk products are obtained.
Required bacterial counts, somatic cell counts and cooling temperature checks shall be performed on raw milk for pasteurization. In addition, drug tests on each producer's milk shall be conducted at least four (4) times during any consecutive six (6) months.
All pasteurized (including Aseptically Processed and Ultra-Pasteurized) milk and milk products required sampling and testing to be done only when there are test methods available that are validated by FDA and accepted by the NCIMS, otherwise there would be no requirement for sampling. Required bacterial counts, coliform counts, drug tests, phosphatase and cooling temperature determinations shall be performed on Grade "A" pasteurized milk and milk products defined in this *Ordinance* only when there are validated and accepted test methodology.

NOTE: When multiple samples of the same milk or milk products, except for aseptically processed milk and milk products, are collected from the same producer or processor from multiple tanks or silos on the same day, the laboratory results are averaged arithmetically by the Regulatory Agency and recorded as the official results for that day. This is applicable for bacterial (standard plate count and coliform), somatic cell count and temperature determinations only.

Whenever two (2) of the last four (4) consecutive bacterial counts (except those for aseptically processed milk and milk products), somatic cell count, coliform determinations, or cooling temperatures, taken on separate days, exceed the standard for the milk and/or milk products as defined in this *Ordinance*, the Regulatory Agency shall send a written notice thereof to the

person concerned. This notice shall be in effect as long as two (2) of the last four (4) consecutive samples exceed the standard. An additional sample shall be taken within twenty-one (21) days of the sending of such notice, but not before the lapse of three (3) days. Immediate suspension of permit, in accordance with Section 3, and/or court action shall be instituted whenever the standard is violated by three (3) of the last five (5) bacterial counts (except those for aseptically processed milk and milk products), somatic cell counts, coliform determinations or cooling temperatures.

Whenever a phosphatase test is positive, the cause shall be determined. Where the cause is improper pasteurization, it shall be corrected and any milk or milk product involved shall not be offered for sale.

Whenever a pesticide residue test is positive, an investigation shall be made to determine the cause and the cause shall be corrected. An additional sample shall be taken and tested for pesticide residues and no milk or milk products as defined in this *Ordinance* shall be offered for sale until it is shown by a subsequent sample to be free of pesticide residues or below the actionable levels established for such residues.

Whenever a drug residue test is confirmed positive, an investigation shall be made to determine the cause, and the cause shall be corrected in accordance with the provisions of Appendix N.

Whenever a container or containers of aseptically processed milk or milk product is found to be non-sterile, due to under-processing, the Regulatory Agency shall consider this to be an imminent hazard to public health and shall suspend the permit of the milk plant for the sale of aseptically processed milk and milk products. No aseptically processed milk and milk product shall be sold until it can be shown that the processes, equipment and procedures used are suitable for consistent production of a sterile product. All products from the lot that were found to contain one (1) or more non-sterile units shall be recalled and disposed of as directed by the Regulatory Agency.

Samples shall be analyzed at an appropriate official or officially designated laboratory. All sampling procedures, including the use of approved in-line samplers, and required laboratory examinations shall be in substantial compliance with the most current edition of *Standard Methods for the Examination of Dairy Products* (SMEDP) of the American Public Health Association, and the most current edition of *Official Methods of Analysis of AOAC INTERNATIONAL* (OMA). Such procedures, including the certification of sample collectors and examinations shall be evaluated in accordance with the *EML*. Aseptically processed milk and milk products packaged in hermetically sealed containers shall be tested in accordance with FDA's *Bacteriological Analytical Manual* (BAM).

Each milk plant regulated under the NCIMS HACCP Program shall adequately document its response to each regulatory sample test result that exceeds any maximum level specified in Section 7 of this *Ordinance*. The Regulatory Agency will monitor and verify that appropriate action(s) was taken by the milk plant.

Examinations and tests to detect adulterants, including pesticides, shall be conducted, as the Regulatory Agency requires. When the Commissioner of the FDA determines that a potential problem exists with animal drug residues or other contaminants in the milk supply, samples shall be analyzed for the contaminant by a method(s) determined by FDA to be effective in determining compliance with actionable levels or established tolerances. This testing will continue until such time that the Commissioner of the FDA is reasonably assured that the problem has been corrected. The determination of a problem is to be based upon:

1. Sample survey results;
2. USDA tissue residue data from cull and veal dairy animals;
3. Animal drug disappearance and sales data;
4. State feed back; and
5. Other relevant information.

Assays of milk and milk products as defined in this *Ordinance*, to which vitamin(s) A and/or D have been added, shall be made at least annually in a laboratory, which has been accredited by FDA and which is acceptable to the Regulatory Agency, using test methods acceptable to FDA or other official methodologies, which gives statistically equivalent results to the FDA methods. Vitamin testing laboratories are accredited if they have one (1) or more certified analysts and meet the quality control requirements of the program established by FDA. Laboratory accreditation and analyst certification parameters are specified in the *EML* manual.
In addition, all facilities fortifying milk or milk products with vitamins must keep volume control records. These volume control records must cross reference the form and amount of vitamin D, vitamin A and/or vitamins A and D used with the amount of products produced and indicate a percent of expected use, plus or minus.

ADMINISTRATIVE PROCEDURES

ENFORCEMENT PROCEDURES: All violations of bacteria, coliform, confirmed somatic cell counts and cooling temperature standards should be followed promptly by inspection to determine and correct the cause. (Refer to Appendix E. Examples of Three (3)-out-of-Five (5) Compliance Enforcement Procedures)
Aseptically processed milk and milk products packaged in hermetically sealed containers are exempt from the refrigerated storage requirements of this *Ordinance*. Therefore, whenever a breakdown in the processing or packaging of these products occurs an imminent hazard to public health exists. Prompt action is needed by the Regulatory Agency. Milk plants aseptically processing milk and milk products in hermetically sealed containers should be encouraged to perform bacterial and other quality tests on each lot of aseptically processed milk and milk product produced in order to ascertain that these products have been properly processed and have not been rendered non-sterile after aseptic processing and packaging. The Regulatory Agency may utilize industry records, of each lot of aseptically processed milk and milk products, to determine when lots can be released for sale after a violation of the bacterial standards has existed.

LABORATORY TECHNIQUES: Procedures for the collection, including the use of approved in-line samplers, and holding of samples; the selection and preparation of apparatus, media and reagents; and the analytical procedures, incubation, reading and reporting of results, shall be in substantial compliance with the FDA 2400 series forms, *SMEDP* and *OMA*. The procedures shall be those specified therein for:

1. Standard plate count at 32ºC (agar or Petrifilm method).
2. Alternate methods, for bacterial counts at 32°C (89.6°F), including the Plate Loop Count, Spiral Plate Count and the BactoScan FC for raw milk.

3. Coliform test with solid media or Petrifilm method at 32ºC for all milk and milk products, and the Petrifilm High Sensitivity Coliform Count method for all milk and milk products, except unflavored whole, reduced or low fat and nonfat (skim) milk.
4. A viable bacterial count of nonfat dry milk shall be made in accordance with the procedures in *SMEDP* for the Standard Plate Count of Dry Milk, except agar plates shall be incubated for 72 hours.
5. Beta lactam methods which have been independently evaluated or evaluated by FDA and have been found acceptable by FDA for detecting drug residues in raw milk, or pasteurized milk, or that particular type of pasteurized milk product at current safe or tolerance levels, shall be used for each drug of concern, except those products for which there are not any approved drug test kits available. Regulatory action shall be taken on all confirmed positive results. (Refer to Appendix N.) A result shall be considered positive if it has been obtained by using a method, which has been evaluated and deemed acceptable by FDA and accepted by the NCIMS at levels established in memoranda transmitted periodically by FDA as required by Section IV of Appendix N.
6. Screening and Confirmatory Methods for the Detection of Abnormal Milk: The results of the screening test or confirmatory test shall be recorded on the official records of the dairy farm and a copy of the results sent to the milk producer.
When a warning letter has been sent, because of excessively high somatic cell counts, an official inspection of the dairy should be made by regulatory personnel or certified industry personnel. This inspection should be made during milking time.

6a. Milk (Non-Goat): Any of the following confirmatory or screening test procedures shall be used: Single Strip Direct Microscopic Somatic Cell Count or Electronic Somatic Cell Count.

6b. Goat Milk: Direct Microscopic Somatic Cell Count or Electronic Somatic Cell Count may be used for screening raw goat milk samples, to indicate a range of somatic cell levels, as long as the somatic cell standard for goat milk remains 1,000,000/mL. Screening for official purposes must be conducted by an analyst (s) certified for that procedure.

Only the Pyronine Y-Methyl Green stain or "New York modification" Single Strip Direct Microscopic Somatic Cell Count test procedures shall be used to confirm the level of somatic cells in goat milk by certified analysts.

7. Electronic Phosphatase Tests: The phosphatase test is an index of the efficiency of the pasteurization process. In the event an accredited laboratory finds that a sample confirms positive for phosphatase, the pasteurization process shall be investigated and corrected. When a laboratory phosphatase test is confirmed positive, or if any doubt should arise as to the compliance of the equipment, standards or methods outlined in Section 7, Item 16p, the Regulatory Agency should immediately conduct field phosphatase testing at the milk plant. (Refer to Appendix G.)
8. Vitamin testing shall be performed using test methods acceptable to FDA or other official methodologies, which give statistically equivalent results to the FDA methods.
9. Any other tests, which have been approved by FDA to be equally accurate, precise and practical.
10. All standards used in the development and use of drug residue detection methods designed for *Grade "A" PMO* monitoring programs will be referenced to a United States Pharmacopeia (USP) standard when available. When a USP standard is not available, then the original method must define the standard to be used.

11. Procedural or reagent changes for official tests must be submitted to FDA for acceptance prior to being used by certified NCIMS milk laboratories.

SAMPLING PROCEDURES: *SMEDP* contains guidance for sampling of milk and milk products. (Refer to Appendix G. for a reference to drug residues in milk and the conditions under which a positive phosphatase reaction may be encountered in properly pasteurized milk or cream. Refer to Appendix B. for reference to farm bulk milk hauling programs regarding training, licensing/permitting, routine inspection and the evaluation of sampling procedures.)
When samples of raw milk for pasteurization are taken at a milk plant prior to pasteurization, they shall be drawn following adequate agitation from randomly selected storage tanks. All counts and temperatures should be recorded on a milk-ledger form as soon as reported by the laboratory. A computer or other information retrieval system may be used.

NOTE: Milk from animals not currently in the *Grade "A" PMO* may be labeled as Grade "A" and IMS listed upon FDA's acceptance of validated *Grade "A" PMO*, Section 6 and Appendix N. test methods for the animal to be added.

SECTION 7. STANDARDS FOR GRADE "A" MILK AND MILK PRODUCTS

All Grade "A" raw milk or milk products for pasteurization, ultra-pasteurization, or aseptic processing and all Grade "A" pasteurized, ultra-pasteurized or aseptically processed milk and milk products, shall be produced, processed**,** manufactured and pasteurized, ultra-pasteurized, or aseptically processed to conform to the following chemical, physical, bacteriological and temperature standards and the sanitation requirements of this Section.
No process or manipulation other than pasteurization, ultra-pasteurization or aseptic processing; processing methods integral therewith; and appropriate refrigeration shall be applied to milk and milk products for the purpose of removing or deactivating microorganisms. Provided, that in the bulk shipment of cream, nonfat (skim) milk or reduced fat or lowfat milk, the heating of the raw milk, one time, to temperatures greater than 52ºC (125ºF) but less than 72ºC (161ºF), for separation purposes, is permitted when the resulting bulk shipment(s) of cream, nonfat (skim) milk or reduced fat or lowfat milk are labeled heat-treated. In the case of heat-treated cream, the cream may be further heated to less than 75ºC (166ºF) in a continuing heating process and immediately cooled to 7ºC (45ºF) or less when necessary for enzyme deactivation (such as lipase reduction) for a functional reason.
Milk plants, receiving stations and transfer stations participating in the NCIMS HACCP Program, shall also comply with the requirements of Appendix K. of this *Ordinance*.
Whey shall be from cheese made from Grade "A" raw milk for pasteurization as provided in this *Ordinance*.
Buttermilk shall be from butter made from Grade "A" cream, which has been pasteurized prior to use in accordance with Item 16p of this *Ordinance*. Provided, that this requirement shall not be construed as barring any other heat treatment process which has been recognized by the FDA to be equally efficient in the destruction of staphylococcal organisms and which is approved by the Regulatory Agency.

Buttermilk and whey used in the manufacture of Grade "A" milk and milk products shall be produced in a milk/cheese plant that complies with Items 1p, 2p, 3p, 4p, 5p 6p, 7p 8p, 9p, 10p, 11p, 12p, 13p, 14p, 15p, 17p, 20p, 21p and 22p as provided in this *Ordinance*.
Whey shall be from:

1. Cheese made from Grade "A" raw milk for pasteurization, which has been pasteurized prior to use, in accordance with Item 16p of this *Ordinance*, or
2. Cheese made from Grade "A" raw milk for pasteurization, which has been heat-treated to a temperature of at least 64°C (147°F) and held continuously at that temperature for at least twenty one (21) seconds or to at least 68°C (153°F) and held continuously at that temperature for at least fifteen (15) seconds, in equipment meeting the pasteurization requirements provided for in this O*rdinance*. Provided, that this requirement shall not be construed as barring any other heat treatment process which has been recognized by the FDA to be equally efficient in the destruction of staphylococcal organisms and which is approved by the Regulatory Agency.

Table 1. Chemical, Physical, Bacteriological, and Temperature Standards		
GRADE "A" RAW MILK AND MILK PRODUCTS FOR PASTEURIZATION, ULTRA-PASTEURIZATION OR ASEPTIC PROCESSING	Temperature.....	Cooled to 10ºC (50ºF) or less within four (4) hours or less, of the commencement of the first milking, and to 7°C (45ºF) or less within two (2) hours after the completion of milking. Provided, that the blend temperature after the first milking and subsequent milkings does not exceed 10ºC (50ºF). **NOTE:** Milk sample submitted for testing cooled and maintained at 0ºC (32ºF) to 4.4ºC (40ºF), where sample temperature is >4.4ºC (40ºF), but ≤7.0ºC (45ºF) and less than three (3) hours after collection has not increased in temperature.
	Bacterial Limits.....	Individual producer milk not to exceed 100,000 per mL prior to commingling with other producer milk. Not to exceed 300,000 per mL as commingled milk prior to pasteurization. **NOTE:** Tested in conjunction with the drug residue/inhibitory substance test.
	Drugs.....……	No positive results on drug residue detection methods as referenced in Section 6 - Laboratory Techniques.
	Somatic Cell Count*...	Individual producer milk not to exceed 750,000 per mL.
GRADE "A" PASTEURIZED MILK AND MILK PRODUCTS AND BULK SHIPPED HEAT-TREATED MILK PRODUCTS	Temperature.....	Cooled to 7ºC (45ºF) or less and maintained thereat. **NOTE:** Milk sample submitted for testing cooled and maintained at 0ºC (32ºF) to 4.4ºC (40ºF), where sample temperature is >4.4ºC (40ºF), but ≤7.0ºC (45ºF) and less than three (3) hours after collection has not increased in temperature.
	Bacterial Limits**…...	20,000 per mL, or gm.*** **NOTE:** Tested in conjunction with the drug residue/inhibitory substance test.
	Coliform****.....	Not to exceed 10 per mL. Provided, that in the case of bulk milk transport tank shipments, shall not exceed 100 per mL. **NOTE:** Tested in conjunction with the drug residue/inhibitory substance test.
	Phosphatase*****.....	Less than 350 milliunits/L for fluid products and other milk products by approved electronic phosphatase procedures.
	Drugs**.....….	No positive results on drug residue detection methods as referenced in Section 6 - Laboratory Techniques which have been found to be acceptable for use with pasteurized and heat-treated milk and milk products.

GRADE "A" PASTEURIZED CONCENTRATED (CONDENSED) MILK AND MILK PRODUCTS	Temperature……	Cooled to 7°C (45°F) or less and maintained thereat unless drying is commenced immediately after condensing.
	Coliform……	Not to exceed 10 per gram. *Provided,* that in the case of bulk milk transport tank shipments shall not exceed 100 per gram.
GRADE "A" ULTRA-PASTEURIZED MILK AND MILK PRODUCTS	Temperature.....	Cooled to 7ºC (45ºF) or less and maintained thereat.
	Bacterial Limits**…...	20,000 per mL, or gm.***
	Coliform****.....	Not to exceed 10 per mL. Provided, that in the case of bulk milk transport tank shipments, shall not exceed 100 per mL.
	Phosphatase*****.....	Phosphatase testing of Ultra-Pasteurized milks is not required.
	Drugs**.....…..	There are no validated and accepted drug residue tests for Ultra-Pasteurized Milk and Milk Products
GRADE "A" ASEPTICALLY PROCESSED MILK AND MILK PRODUCTS	Temperature.....	None.
	Bacterial Limits.....	Refer to 21 CFR 113. 3(e)(1)******
	Drugs**.....	There are no validated and accepted drug residue tests for Aseptically Processed Milk and Milk Products.
GRADE "A" NONFAT DRY MILK		No More Than:
	Butterfat……	1.25%
	Moisture……	4.00%
	Titratable Acidity……..	0.15%
	Solubility Index……	1.25mL.
	Bacterial Estimate…….	30,000 per gram
	Coliform……...	10 per gram
	Scorched Particles disc B……	15.0 per gram
GRADE "A" WHEY FOR CONDENSING AND/OR DRYING	Temperature…….	Maintained at a temperature of 45°F (7°C) or less, or 57°C (135°F) or greater, except for acid-type whey with a titratable acidity of 0.40% or above, or a pH of 4.6 or below.
GRADE "A" PASTEURIZED CONDENSED WHEY AND WHEY PRODUCTS	Temperature……..	Cooled to 10°C (50°F) or less during crystallization, within 72 hours of condensing.
	Coliform Limit……..	Not to exceed 10 per gram.
GRADE "A" DRY WHEY, GRADE "A" DRY WHEY PRODUCTS, GRADE "A" DRY BUTTERMILK, AND GRADE "A" DRY BUTTERMILK PRODUCTS	Coliform Limit……..	Not to exceed 10 per gram.

* Goat Milk 1,000,000 per mL
** Not applicable to acidified or cultured products, eggnog and flavored (non-chocolate) milk and milk products.

*** Results of the analysis of dairy products which are weighed in order to be analyzed will be reported in # per gm. (Refer to the current edition of the *SMEDP*)
**** Not applicable to bulk shipped heat-treated milk products.
***** Not applicable to bulk shipped heat-treated milk products; UP products that have been thermally processed at or above 138^0C (280^0F) for at least two (2) seconds to produce a product which has an extended shelf life (ESL) under refrigerated conditions; and condensed products.
****** 21 CFR 113.3(e)(1) contains the definition of "COMMERCIAL STERILITY".

STANDARDS FOR GRADE "A" RAW MILK FOR PASTEURIZATION, ULTRA-PASTEURIZATION OR ASEPTIC PROCESSING

ITEM 1r. ABNORMAL MILK

Lactating animals which show evidence of the secretion of milk with abnormalities in one (1) or more quarters, based upon bacteriological, chemical or physical examination, shall be milked last or with separate equipment and the milk shall be discarded. Lactating animals producing contaminated milk, that is, lactating animals which have been treated with, have consumed chemical, medicinal or radioactive agents, which are capable of being secreted in the milk and which, in the judgment of the Regulatory Agency, may be deleterious to human health, shall be milked last or with separate equipment and the milk disposed of as the Regulatory Agency may direct. (For applicability to Automatic Milking Installations (AMIs), refer to Appendix Q.)

PUBLIC HEALTH REASON

The health of lactating animals is a very important consideration because a number of diseases of lactating animals, including salmonellosis, staphylococcal infection and streptococcal infection, may be transmitted to man through the medium of milk. The organisms of most of these diseases may get into the milk either directly from the udder or indirectly through infected body discharges which may drop, splash or be blown into the milk.
Bovine mastitis is an inflammatory and, generally, highly communicable disease of the bovine udder. Usually, the inciting organism is a streptococcus of bovine origin (type B), but a staphylococcus or other infectious agent often causes the disease. Occasionally lactating animal's udders become infected with hemolytic streptococci of human origin, which may result in milkborne epidemics of scarlet fever or septic sore throat. The toxins of staphylococci and possibly other organisms in milk may cause severe gastroenteritis. Some of these toxins are not destroyed by pasteurization.

ADMINISTRATIVE PROCEDURES

This Item is deemed to be satisfied when:

1. Milk from lactating animals being treated with medicinal agents, which are capable of being secreted in the milk, is not offered for sale for such a period as is recommended by the attending veterinarian or as indicated on the package label of the medicinal agent.
2. Milk from lactating animals treated with or exposed to insecticides, not approved for use on dairy animals by the EPA, is not offered for sale.
3. The Regulatory Agency requires such additional tests for the detection of milk with abnormalities, as they deem necessary.
4. Bloody, stringy, off-colored milk, or milk that is abnormal to sight or odor, is so handled and disposed of as to preclude the infection of other lactating animals and the contamination of milk utensils.
5. Lactating animals secreting milk with abnormalities are milked last or in separate equipment, which effectively prevents the contamination of the wholesome supply. Milking equipment used on animals with abnormalities in their milk is maintained clean to reduce the possibility of re-infecting or cross infection of the dairy animals.
6. Equipment, utensils and containers used for the handling of milk with abnormalities are not used for the handling of milk to be offered for sale, unless they are first cleaned and effectively sanitized.
7. Processed animal waste derivatives, used as a feed ingredient for any portion of the total ration of the lactating dairy animal, have been:
   a. Properly processed in accordance with at least those requirements contained in the Model Regulations for Processed Animal Wastes developed by the Association of American Feed Control Officials; and
   b. Do not contain levels of deleterious substances, harmful pathogenic organisms or other toxic substances, which are secreted in the milk at any level, which may be deleterious to human health.
8. Unprocessed poultry litter and unprocessed recycled animal body discharges are not fed to lactating dairy animals.

ITEM 2r. MILKING BARN, STABLE OR PARLOR - CONSTRUCTION

A milking barn, stable or parlor shall be provided on all dairy farms in which the milking herd shall be housed during milking time operations. (For applicability to AMIs, refer to Appendix Q.) The areas used for milking purposes shall:

1. Have floors constructed of concrete or equally impervious materials. Provided, convalescent (maternity) pens located in milking areas of stanchion-type barns may be used when they comply with the guidelines specified in Appendix C., III.
2. Have walls and ceilings, which are smooth, painted or finished in an approved manner; in good repair; and ceiling dust-tight.
3. Have separate stalls or pens for horses, calves and bulls, and not be overcrowded.
4. Be provided with natural and/or artificial light, well distributed, for day and/or night milking.
5. Provide sufficient air space and air circulation to prevent condensation and excessive odors.

PUBLIC HEALTH REASON

When milking is done elsewhere than in a suitable place provided for this purpose, the milk may become contaminated. Floors constructed of concrete or other impervious materials can be kept clean more easily than floors constructed of wood, earth or similar materials and are; therefore, more apt to be kept clean. Painted, or properly finished walls and ceilings encourage cleanliness. Tight ceilings reduce the likelihood of dust and extraneous material getting into the milk. Adequate lighting makes it more probable that the barn will be clean and that the lactating animals will be milked in a sanitary manner.

ADMINISTRATIVE PROCEDURES

This Item is deemed to be satisfied when:

1. A milking barn, stable or parlor is provided on all dairy farms.
2. Gutters, floors and feed troughs are constructed of good quality concrete or equally impervious material. Floors shall be easily cleaned, brushed surfaces permitted; be graded to drain; maintained in good repair; and free of excessive breaks or worn areas that may create pools.
3. Gravity flow manure channels in milking barns, if used, shall be constructed in accordance with the specifications of Appendix C., II. or acceptable to the Regulatory Agency.
4. Stall barns, when used with gutter grates over manure storage pits, are designed and constructed in accordance with the specifications of Appendix C., IV. or acceptable to the Regulatory Agency.
5. Walls and ceilings are finished with wood, tile, smooth-surfaced concrete, cement plaster, brick or other equivalent materials with light colored surfaces. Walls, partitions, doors, shelves, windows and ceilings shall be kept in good repair; and surfaces shall be refinished whenever wear or discoloration is evident.

Whenever feed is stored overhead, ceilings shall be constructed to prevent the sifting of chaff and dust into the milking barn, stable or parlor. If a hay opening is provided from a loft, which is open into the milking portion of the barn, such openings shall be provided with a dust-tight door, which shall be kept closed during milking operations.

6. Bull pens, maternity, calf and horse stalls are partitioned from the milking portion of the barn. Such portions of the barn that are not separated by tight partitions shall comply with all the requirements of this Item.
7. Overcrowding is not evidenced by the presence of calves, lactating animals or other barnyard animals in walks or feed alleys. Inadequate ventilation and excessive odors may also be evidence of an overcrowded barn.
8. The milking barn is provided with natural and/or artificial light to insure that all surfaces and particularly the working areas will be plainly visible. The equivalent of at least ten (10) foot-candles (110 lux) of light in all working areas shall be provided.
9. Air circulation is sufficient to minimize odors and to prevent condensation upon walls and ceilings.
10. A dust-tight partition, provided with doors that are kept closed, except when in actual use, shall separate the milking portion of the barn from any feed room or silo in which feed is ground or mixed, or in which sweet feed is stored.

When conditions warrant, the Regulatory Agency may approve a barn without four walls extending from floor to roof, or a shed-type barn provided the requirement of Item 3r, prohibiting animals and fowl from entering the barn is satisfied.

ITEM 3r. MILKING BARN, STABLE OR PARLOR - CLEANLINESS

The interior shall be kept clean. Floors, walls, ceilings, windows, pipelines and equipment shall be free of filth and/or litter and shall be clean. Swine and fowl shall be kept out of the milking area.
Feed shall be stored in a manner that will not increase the dust content of the air or interfere with the cleaning of the floor. (For applicability to AMIs, refer to Appendix Q.)
Surcingles, or belly straps, milk stools and antikickers shall be kept clean and stored above the floor.

PUBLIC HEALTH REASON

A clean interior reduces the chances of contamination of the milk or milk pails during milking. The presence of other animals increases the potential for the spread of disease. Clean milk stools and surcingles reduce the likelihood of contamination of the milker's hands between the milking of one (1) lactating animal and the milking of another.

ADMINISTRATIVE PROCEDURES

This Item is deemed to be satisfied when:

1. The interior of the milking barn, stable or parlor is kept clean.
2. Leftover feed in feed mangers appears fresh and is not wet or soggy.
3. The bedding material, if used, does not contain more manure than has accumulated since the previous milking.
4. Outside surfaces of pipeline systems located in the milking barn, stable or parlor are reasonably clean.
5. Gutter cleaners are reasonably clean.
6. All pens, calf stalls and bull pens, if not separated from the milking barn, stable or parlor, are clean.
7. Swine and fowl are kept out of the milking area.
8. Milk stools are not padded and are constructed to be easily cleaned. Milk stools, surcingles and antikickers are kept clean and are stored above the floor in a clean place in the milking barn, stable, parlor or milkhouse, when not in use.
9. Gravity flow manure channels in milking barns, if used, shall be maintained in accordance with Appendix C., II.
10. Stall barns, when used with gutter grates over manure storage pits, are operated and maintained in accordance with the specifications of Appendix C., IV.

The method of cleaning is immaterial. Dairy operators whose barns are provided with water under pressure should scrub the floors after each milking with a stiff-bristled brush. In barns in which water under pressure is not available, the floors may be brushed-dry and limed. In the

latter event, care should be exercised to prevent caking of the lime. When lime or phosphate is used, it shall be spread evenly on the floor as a thin coating. If clean floors are not maintained by this method, the sanitarian should require cleaning with water.

ITEM 4r. COWYARD

The cowyard shall be graded and drained and shall have no standing pools of water or accumulations of organic wastes. Provided, that in loafing or lactating animal-housing areas, lactating animal droppings and soiled bedding shall be removed, or clean bedding added, at sufficiently frequent intervals to prevent the soiling of the lactating animal's udder and flanks. Cooling ponds shall be allowed provided they are constructed and maintained in a manner that does not result in the visible soiling of flanks, udders, bellies and tails of lactating animals exiting the pond. Waste feed shall not be allowed to accumulate. Manure packs shall be properly drained and shall provide a reasonably firm footing. Swine shall be kept out of the cowyard.

PUBLIC HEALTH REASON

The cowyard is interpreted to be that enclosed or unenclosed area in which the lactating animals are apt to congregate, approximately adjacent to the barn, including animal-housing areas. This area is; therefore, particularly apt to become filthy with manure droppings, which may result in the soiling of the lactating animal's udders and flanks. The grading and drainage of the cowyard, as far as is practicable, is required because wet conditions are conducive to fly breeding and make it difficult to keep manure removed and the lactating animals clean. If manure and barn sweepings are allowed to accumulate in the cowyard, fly breeding will be promoted, and the lactating animals, because of their habit of lying down, will be more apt to have manure-soiled udders. Lactating animals should not have access to piles of manure, in order to avoid the soiling of udders and the spread of diseases among dairy animals.

ADMINISTRATIVE PROCEDURES

This Item is deemed to be satisfied when:

1. The cowyard, which is the enclosed or unenclosed area adjacent to the milking barn in which the lactating animals may congregate, including animal-housing areas and feed lots, is graded and drained, depressions and soggy areas are filled, and lactating animal's lanes are reasonably dry.
2. Approaches to the barn door and the surroundings of stock watering and feed stations are solid to the footing of the animals.
3. Wastes from the barn or milkhouse are not allowed to pool in the cowyard. Cowyards, which are muddy due to recent rains, should not be considered as violating this Item.
4. Manure, soiled bedding and waste feed are not stored or permitted to accumulate therein in such a manner as to permit the soiling of cow's udders and flanks. Animal-housing areas, stables without stanchions, such as loose-housing stables, pen stables, resting barns, holding barns, loafing sheds, wandering sheds and free-stall housing, shall be considered as part of the cowyard. Manure packs shall be solid to the footing of the animals. (Refer to Appendix C.)

5. Cowyards are kept reasonably free of animal droppings. Animal droppings shall not be allowed to accumulate in piles that are accessible to the animals.

ITEM 5r. MILKHOUSE - CONSTRUCTION AND FACILITIES

A milkhouse of sufficient size shall be provided, in which the cooling, handling and storing of milk and the washing, sanitizing and storing of milk containers and utensils shall be conducted, except as provided for in Item 12r of this Section.
The milkhouse shall be provided with a smooth floor constructed of concrete or equally impervious material; graded to drain; and maintained in good repair. Liquid waste shall be disposed of in a sanitary manner. Floor drains shall be accessible and shall be trapped if connected to a sanitary sewer system.
The walls and ceilings shall be constructed of smooth material; be in good repair; and be well painted, or finished in an equally suitable manner.
The milkhouse shall have adequate natural and/or artificial light and be well ventilated.
The milkhouse shall be used for no other purpose than milkhouse operations. There shall be no direct opening into any barn, stable or parlor or into a room used for domestic purposes. Provided, that a direct opening between the milkhouse and milking barn, stable or parlor is permitted when a tight-fitting, self-closing, solid door(s) hinged to be single or double acting is provided. Screened vents in the wall between the milkhouse and a breezeway, which separates the milkhouse from the milking parlor, are permitted, provided animals are not housed within the milking facility.
Water under pressure shall be piped into the milkhouse.
The milkhouse shall be equipped with a two (2) compartment wash vat and adequate hot water heating facilities.
A transportation tank may be used for the cooling and/or storage of milk on the dairy farm. Such tank shall be provided with a suitable shelter for the receipt of milk. Such shelter shall be adjacent to, but not a part of, the milkhouse and shall comply with the requirements of the milkhouse with respect to construction items: lighting; drainage; insect and rodent control; and general maintenance. In addition, the following minimum criteria shall be met:

1. An accurate, accessible temperature recording device shall be installed in the milk line downstream from an effective cooling device, which cools the milk to 7°C (45°F) or less. An indicating thermometer shall be installed as close as possible to the recording device for verification of recording temperatures. This indicating thermometer shall comply with all applicable requirements in Appendix H. This thermometer shall be used to check the recording thermometer during the regulatory inspection and the results recorded on the recording chart.
2. The milk shall be sampled at the direction of the Regulatory Agency in a manner so as to preclude contaminating the milk tank truck or sample, by a permitted milk sample collector.
3. The milk tank truck shall be effectively agitated in order to collect a representative sample.

When the Regulatory Agency determines conditions exist whereby the milk tank truck can be adequately protected and sampled without contamination, a shelter need not be provided if the following minimum criteria are met:

1. The milk hose connection is accessible to, and made from within, the milkhouse. The milk hose connection to the milk tank truck is completely protected from the outside environment at all times.
2. To assure continued protection of the milk, the milk tank truck manhole must be sealed after the truck has been cleaned and sanitized.
3. The milk tank truck shall be washed and sanitized at the permitted milk plant, receiving station, or transfer station receiving the milk, or at a permitted milk tank truck cleaning facility.
4. An accurate, accessible temperature-recording device shall be installed in the milk line downstream from an effective cooling device, which cools the milk to 7°C (45°F) or less. An indicating thermometer shall be installed as close as possible to the recording device for verification of recording temperatures. This indicating thermometer shall comply with all applicable requirements in Appendix H. This thermometer shall be used to check the recording thermometer during the regulatory inspection and the results recorded on the recording chart.
5. The milk shall be sampled at the direction of the Regulatory Agency, in a manner so as to preclude contaminating the milk tank truck or sample, by a permitted milk sample collector. The milk in the milk tank truck shall be effectively agitated in order to collect a representative sample.
6. The milk tank truck shall be parked on a self-draining concrete or equally impervious surface during filling and storage.

PUBLIC HEALTH REASON

Unless a suitable, separate place is provided for the cooling, handling and storing of milk and for the washing, sanitizing and storage of milk utensils, the milk or the utensils may become contaminated. Construction, which permits easy cleaning, promotes cleanliness. A well-drained floor of concrete or other impervious material promotes cleanliness. Ample light promotes cleanliness, and proper ventilation reduces the likelihood of odors and condensation. A milkhouse that is separated from the barn, stable or parlor and the living quarters provides a safeguard against the exposure of milk and milk equipment and utensils to contamination.

ADMINISTRATIVE PROCEDURES

This Item is deemed to be satisfied when:

1. A separate milkhouse of sufficient size is provided for the cooling, handling and storing of milk and the washing, sanitizing and storing of milk containers and utensils, except as provided for in Item 12r of this Section.
2. The floors of all milkhouses are constructed of good quality concrete (float finish permissible), or equally impervious tile, or brick laid closely with impervious material, or metal surfacing with impervious joints or other material the equivalent of concrete and maintained free of breaks, depressions and surface peelings.
3. The floor slopes to drain so that there are no pools of standing water. The joints between the floor and the walls shall be watertight.
4. Liquid wastes are disposed of in a sanitary manner. All floor drains are accessible and are trapped if connected to a sanitary sewer.

5. Walls and ceilings are constructed of smooth dressed lumber or similar material; well painted with a light-colored washable paint; and are in good repair. Surfaces and joints shall be tight and smooth. Sheet metal, tile, cement block, brick, concrete, cement plaster or similar materials of light color may be used and the surfaces and joints shall be smooth.
6. A minimum of twenty (20) foot-candles (220 lux) of light is provided at all working areas from natural and/or artificial light for milkhouse operations.
7. The milkhouse is adequately ventilated to minimize condensation on floors, walls, ceilings and clean utensils.
8. Vents, if installed, and lighting fixtures are installed in a manner to preclude the contamination of bulk milk tanks or clean utensil storage areas.
9. The milkhouse is used for no other purpose than milkhouse operations.
10. There is no direct opening into any barn, stable or parlor or room used for domestic purposes. Except that an opening between the milkhouse and milking barn, stable or parlor is permitted when a tight-fitting, self-closing, solid door(s) hinged to be single or double acting is provided. Except that screened vents are permitted in the wall between the milkhouse and a breezeway, which separates the milkhouse from the milking parlor, provided animals are not housed within the milking facility.
11. A vestibule, if used, complies with the applicable milkhouse construction requirements.
12. The transfer of milk from a bulk milk tank to a bulk milk pickup tanker is through a hose port located in the milkhouse wall. The port shall be fitted with a tight door, which shall be in good repair. It shall be kept closed except when the port is in use. An easily cleanable surface shall be constructed under the hose port, adjacent to the outside wall and sufficiently large to protect the milk hose from contamination.
Provided, milk can be transferred from a bulk milk tank to a bulk milk pickup tanker by stubbing the milk transfer and associated mechanically cleaned lines outside the milkhouse wall, provided:

a. A concrete slab of adequate size, to protect the transfer hose, shall be provided under the stubbed sanitary milk and mechanically cleaned lines.

b. The outside wall of the milkhouse, where the sanitary piping and concrete slab are located shall be properly maintained and kept in good repair.

c. The sanitary piping, stubbed outside the milkhouse, shall be properly sloped to assure complete drainage and the ends of the piping, which are located outside, shall be capped when the transfer hose is disconnected.

d. After the completion of milk transfer, the milk lines and transfer hose shall be properly mechanically cleaned.

e. After the mechanical cleaning process has been completed; the transfer hose shall be disconnected, drained and stored in the milkhouse. Proper storage of the transfer hose includes capping the ends and storing the entire hose up off the floor. The sanitary piping outside the milkhouse shall be capped at all times, except when transferring milk or being mechanically cleaned. When the caps are not being used, they shall be properly cleaned and sanitized after each use and stored in the milkhouse to protect them from contamination. A transfer hose manufactured with permanent hose end fittings, attached in such a manner that will assure a crevice-free joint between the hose and the fitting, may be stored outside of the milkhouse, provided it is mechanically cleaned; the stubbed piping and hose length are of sufficient design to allow complete drainage after cleaning and sanitizing; and the hose remains connected to the stubbed piping when not in use.

f. Means shall be provided to sanitize the milk-contact surfaces of the transfer hose and bulk milk pickup tanker fittings prior to the connection of the transfer hose to the bulk milk pickup tanker.

g. At all times, the bulk milk pickup tanker manhole openings(s) shall remain closed, except for brief periods for sampling and examination when environmental conditions permit.

13. Water under pressure is piped into the milkhouse.

14. Each milkhouse is provided with facilities for heating water in sufficient quantity and to such temperatures for the effective cleaning of all equipment and utensils. (Refer to Appendix C.)

15. The milkhouse is equipped with a wash-and-rinse vat having at least two (2) compartments. Each compartment must be of sufficient size to accommodate the largest utensil or container used. The upright wash vat for milk pipelines and milk machines may be accepted as one (1) part of the two (2) compartment vat. Provided, that the stationary wash rack, in or on the vat, and the milking machines inflations and appurtenances are completely removed from the vat during the washing, rinsing and/or sanitizing of other utensils and equipment. Where mechanical cleaning/recirculated systems eliminate the need for handwashing of equipment, the presence of the second wash vat compartment may be optional, if so determined by the Regulatory Agency, on an individual farm basis.

16. A transportation tank, with or without overhead protection, may be used for cooling and/or storing milk on a dairy farm. If a suitable shelter is provided for a transportation truck, used for cooling and/or storing milk, such shelter shall be adjacent to, but not a part of, the milkhouse and shall comply with the prerequisites of the milkhouse with respect to construction items: lighting; drainage; insect and rodent control; and general maintenance. (Refer to Appendix C. for suggested plans and information on size, construction, operation and maintenance of milkhouses) In addition, the following minimum criteria shall be met:

a. An accurate, accessible temperature-recording device shall be installed in the milk line downstream from an effective cooling device that cools the milk to 7°C (45°F) or less. An indicating thermometer shall be installed as close as possible to the recording device for verification of recording temperatures. This indicating thermometer shall comply with all applicable requirements in Appendix H. This thermometer shall be used to check the recording thermometer during the regulatory inspection and the results recorded on the recording chart.

b. The milk shall be sampled at the direction of the Regulatory Agency in a manner so as to preclude contaminating the milk tank truck or sample, by an acceptable milk sample collector.

c. The milk tank truck shall be effectively agitated in order to collect a representative sample.

When the Regulatory Agency determines conditions exist whereby the milk tank truck can be adequately protected and sampled without contamination, a shelter need not be provided if the following minimum criteria are met:

a. The milk hose connection is accessible to, and made from within, the milkhouse. The milk hose connection to the milk tank truck is completely protected from the outside environment at all times.

b. To assure continued protection of the milk, the milk tank truck manhole must be sealed after the truck has been cleaned and sanitized.

c. The milk tank truck shall be washed and sanitized at the permitted milk plant, receiving station or transfer station receiving the milk or at a permitted milk tank truck cleaning facility.

d. An accurate, accessible temperature-recording device shall be installed in the milk line downstream from an effective cooling device, which cools the milk to below 7°C (45°F). An indicating thermometer shall be installed as close as possible to the recording device for verification of recording temperatures. This indicating thermometer shall comply with all applicable requirements in Appendix H. This thermometer shall be used to check the recording thermometer during the regulatory inspection and the results recorded on the recording chart.

e. The milk shall be sampled at the direction of the Regulatory Agency, in a manner so as to preclude contaminating the milk tank truck or sample, by a permitted milk sample collector. The milk in the milk tank truck shall be effectively agitated in order to collect a representative sample.

f. The milk tank truck shall be parked on a self-draining concrete or equally impervious surface during filling and storage.

ITEM 6r. MILKHOUSE - CLEANLINESS

The floors, walls, ceilings, windows, tables, shelves, cabinets, wash vats, non-product-contact surfaces of milk containers, utensils and equipment and other milkhouse equipment shall be clean. Only articles directly related to milkhouse activities shall be permitted in the milkhouse. The milkhouse shall be free of trash, animals and fowl.

PUBLIC HEALTH REASON

Cleanliness in the milkhouse reduces the likelihood of contamination of the milk.

ADMINISTRATIVE PROCEDURES

This Item is deemed to be satisfied when:

1. The milkhouse structure, equipment and other milkhouse facilities, used in its operation or maintenance, are clean at all times.
2. Incidental articles such as desks, refrigerators, and storage cabinets may be in the milkhouse, provided they are kept clean and ample space is available to conduct the normal operations in the milkhouse and will not cause contamination of the milk.
3. Vestibules, if provided, are kept clean.
4. Animals and fowl are kept out of the milkhouse.

ITEM 7r. TOILET

Every dairy farm shall be provided with one (1) or more toilets; conveniently located; properly constructed; operated; and maintained in a sanitary manner. The waste shall be inaccessible to insects and shall not pollute the soil surface or contaminate any water supply.

PUBLIC HEALTH REASON

The organisms of typhoid fever, dysentery and gastrointestinal disorders may be present in the body wastes of persons who have these diseases. In the case of typhoid fever, well persons (carriers) also may discharge the organisms in their body wastes. If a toilet is not fly-tight and so constructed as to prevent overflow, infection may be carried from the excreta to the milk, either by flies or through the pollution of ground water supplies or streams to which the lactating animals have access.

ADMINISTRATIVE PROCEDURES

This Item is deemed to be satisfied when:

1. There is at least one (1) flush toilet connected to a public sewer system, or to an individual sewage-disposal system, or a chemical toilet, earth pit privy or other type of privy. Such sewage systems shall be constructed and operated in accordance with the standards outlined in Appendix C., or when a Regulatory Agency has more effective standards designed specifically for that region, these standards may apply, provided, there is no mixing of animal and human waste.
2. A toilet or privy is convenient to the milking barn and the milkhouse. There shall be no evidence of human defecation or urination about the premises.
3. No privy opens directly into the milkhouse.
4. The toilet room, including all fixtures and facilities, is kept clean and free of insects and odors.
5. Where flush toilets are used, doors to toilet rooms are tight and self-closing. All outer openings in toilet rooms shall be screened or otherwise protected against the entrance of insects.
6. Vents of earth pits are screened.

ITEM 8r. WATER SUPPLY

Water for milkhouse and milking operations shall be from a supply properly located, protected and operated and shall be easily accessible, adequate and of a safe, sanitary quality.

PUBLIC HEALTH REASON

A dairy farm water supply should be accessible in order to encourage its use in ample quantity in cleaning operations; it should be adequate so that cleaning and rinsing will be thorough; and it should be of a safe, sanitary quality in order to avoid contamination of milk utensils.

A polluted water supply, used in the rinsing of dairy utensils and containers, may be more dangerous than a similar water supply that is used for drinking purposes only. Bacteria grow much faster in milk than in water and the severity of an attack of a given disease depends largely upon the size of the dose of disease organisms taken into the system. Therefore, a small number of disease organisms consumed in a glass of water from a polluted well may possibly result in no harm; whereas, if left in a milk utensil, which has been rinsed with the water, they may after several hours growth, in the milk, increase in such numbers as to cause disease when consumed.

ADMINISTRATIVE PROCEDURES

This Item is deemed to be satisfied when:

1. The water supply for milkhouse and milking operations is approved as safe by the State Water Control Authority and, in the case of individual water systems, complies with the specifications outlined in Appendix D, and the Bacteriological Standards outlined in Appendix G.
2. No cross-connection exists between a safe water supply and any unsafe or questionable water supply or any other source of pollution.
3. There are no submerged inlets through which a safe water supply may be contaminated.
4. The well or other source of water is located and constructed in such a manner that neither underground nor surface contamination from any sewerage systems, privy or other source of pollution can reach such water supply.
5. New individual water supplies and water supply systems, which have been repaired or otherwise become contaminated, are thoroughly disinfected before being placed in use. (Refer to Appendix D.) The supply shall be made free of the disinfectant by pumping to waste before any sample for bacteriological testing shall be collected.
6. All containers and tanks used in the transportation of water are sealed and protected from possible contamination. These containers and tanks shall be subjected to a thorough cleaning and a bacteriological treatment prior to filling with potable water to be used at the dairy farm. To minimize the possibility of contamination of the water during its transfer from the potable tanks to the elevated or groundwater storage at the dairy farm, a suitable pump, hose and fittings shall be provided. When the pump, hose and fittings are not being used, the outlets shall be capped and stored in a suitable dust-proof enclosure so as to prevent their contamination. The storage tank at the dairy farm shall be constructed of impervious material; provided with a dust and rainproof cover; and also provided with an approved vent and roof hatch. All new reservoirs or reservoirs which have been cleaned shall be disinfected prior to placing them into service. (Refer to Appendix D.)
7. Samples for bacteriological examination are taken upon the initial approval of the physical structure, based upon the requirements of this *Ordinance*; when any repair or alteration of the water supply system has been made; and at least every three (3) years. Provided, that water supplies with buried well casing seals, installed prior to the adoption of this Section, shall be tested at intervals no greater than six (6) months apart. Whenever such samples indicate either the presence of bacteria of the coliform group or whenever the well casing, pump or seal need replacing or repair, the well casing and seal shall be brought above the ground surface and shall comply with all other applicable construction criteria of this Section. Provided, that when water is hauled to the dairy farm, such water shall be sampled for bacteriological examination at the point of use and submitted to a laboratory at least four (4) times in separate months during any consecutive six (6) months. Bacteriological examinations shall be conducted in a laboratory acceptable to the Regulatory Agency. To determine if water samples have been taken at the frequency established in this Section, the interval shall include the designated period plus the remaining days of the month in which the sample is due.
8. Current records of water test results shall be retained on file with the Regulatory Agency or as the Regulatory Agency directs.

ITEM 9r. UTENSILS AND EQUIPMENT - CONSTRUCTION

All multi-use containers, utensils and equipment used in the handling, storage or transportation of milk shall be made of smooth, nonabsorbent, corrosion-resistant, non-toxic materials, and shall be so constructed as to be easily cleaned. All containers, utensils and equipment shall be in good repair. Multiple-use woven material shall not be used for straining milk. All single-service articles shall have been manufactured, packaged, transported and handled in a sanitary manner and shall comply with the applicable requirements of Item 11p of this Section. Articles intended for single-service use shall not be reused.
Farm holding/cooling tanks, welded sanitary piping and transportation tanks shall comply with the applicable requirements of Items 10p and 11p of this Section.

PUBLIC HEALTH REASON

Milk containers and other utensils without flush joints and seams, without smooth, easily cleaned, and accessible surfaces, and not made of durable, non-corrodible material, are apt to harbor accumulations in which undesirable bacterial growth is supported. Single-service articles, which have not been manufactured and handled in a sanitary manner, may contaminate the milk.

ADMINISTRATIVE PROCEDURES

This Item is deemed to be satisfied when:

1. All multi-use containers, utensils and equipment, which are exposed to milk or milk products, or from which liquids may drip, drain or be drawn into milk or milk products, are made of smooth impervious, nonabsorbent, safe materials of the following types:
   a. Stainless steel of the American Iron and Steel Institute (AISI) 300 series; or
   b. Equally corrosion-resistant, non-toxic metal; or
   c. Heat-resistant glass; or
   d. Plastic or rubber and rubber-like materials which are relatively inert, resistant to scratching, scoring, decomposition, crazing, chipping and distortion, under normal use conditions; are non-toxic, fat resistant, relatively nonabsorbent, relatively insoluble; do not release component chemicals or impart flavor or odor to the product; and which maintain their original properties under repeated use conditions.
2. Single-service articles have been manufactured, packaged, transported and handled in a sanitary manner and comply with the applicable requirements of Item 11p.
3. Articles intended for single-service use are not reused.
4. All containers, utensils and equipment are free of breaks and corrosion.
5. All joints in such containers, utensils and equipment are smooth and free from pits, cracks or inclusions.
6. Mechanically cleaned milk pipelines and return-solution lines are self-draining. If gaskets are used, they shall be self-positioning and of material meeting specifications described in 1.d. above, and shall be of such design, finish and application as to form a smooth, flush, interior surface. If gaskets are not used, all fittings shall have self-positioning faces designed to form a smooth, flush, interior surface. All interior surfaces of welded joints in pipelines shall be smooth and free of pits, cracks and inclusions.

7. Detailed plans for mechanically cleaned pipeline systems are submitted to the Regulatory Agency for written approval prior to installation. No alteration or addition shall be made to any milk pipeline system without prior written approval of the Regulatory Agency.
8. Strainers, if used, are of perforated metal design, or so constructed as to utilize single-service strainer media.
9. All milking machines, including heads, milk claws, milk tubing and other milk-contact surfaces can be easily cleaned and inspected. Pipelines, milking equipment and appurtenances, which require a screwdriver or special tool, shall be considered easily accessible for inspection, providing the necessary tools are available at the milkhouse. Milking systems shall not have components incorporated in the return solution lines, which by design do not comply with the criteria for product-contact surfaces. Some examples of these are:
   a. Ball type plastic valves;
   b. Plastic tees with barbed ridges to better grip the plastic or rubber hoses; and
   c. The use of PVC water type piping for return solution lines.
10. Milk cans have umbrella-type lids.
11. Farm holding/cooling tanks, welded sanitary piping and transportation tanks comply with the applicable requirements of Items 10p and 11p of this Section.
12. During filling, flexible plastic/rubber hoses may be used between the fill valves of bottom fill and top fill bulk milk storage tanks, when needed for functional purposes. Such hoses shall be drainable, be as short as practical, have sanitary fittings, and be supported to maintain uniform slope and alignment. The end fittings of such hoses shall be permanently attached in such a manner that will assure a crevice-free joint between the hose and the fitting, which can be cleaned by mechanical means. The hoses shall be included as part of a mechanical cleaning system.
13. Transparent flexible plastic tubing (up to 150 feet in length) used in connection with milk transfer stations shall be considered acceptable if it meets the "3-A Sanitary Standards for Multiple-Use Plastic Materials Used as Product Contact Surfaces for Dairy Equipment, Number 20-" and if it remains sufficiently clear that the interior surfaces can be properly inspected. Short lengths of flexible plastic tubing (8 feet or less) may be inspected for cleanliness by sight or by use of a "rod". The transparency or opacity of such tubing under this condition is not a factor in determining cleanliness.
14. AMIs shall comply with all applicable *Grade "A" PMO* requirements and/or 3-A standards.

NOTE: 3-A Sanitary Standards for dairy equipment are promulgated jointly by the Sanitary Standards Subcommittee of the Dairy Industry Committee, the Committee on Sanitary Procedure of the International Association for Food Protection and the Milk Safety Branch, Food and Drug Administration, Public Health Service, Center for Food Safety and Applied Nutrition, Department of Health and Human Services. Equipment manufactured in conformity with 3-A Sanitary Standards complies with the sanitary design and construction standards of this *Ordinance*.

ITEM 10r. UTENSILS AND EQUIPMENT - CLEANING

The product-contact surfaces of all multi-use containers, equipment and utensils used in the handling, storage or transportation of milk shall be cleaned after each usage.

PUBLIC HEALTH REASON

Milk cannot be kept clean or free of contamination if permitted to come into contact with unclean containers, utensils or equipment.

ADMINISTRATIVE PROCEDURES

This Item is deemed to be satisfied when:

1. There shall be a separate wash manifold for all mechanically cleaned milk pipelines in all new or extensively remodeled facilities.
2. The product-contact surface of all multi-use containers, equipment and utensils used in the handling, storage or transportation of milk are cleaned after each milking or once every twenty-four (24) hours for continuous operations.
3. There shall be no partial removal of milk from milk storage/holding tanks by the bulk milk hauler/sampler, except partial pickups may be permitted when the milk storage/holding tank is equipped with a seven (7) day recording device complying with the specifications of Appendix H. or other recording device acceptable to the Regulatory Agency, provided the milk storage/holding tank shall be clean and sanitized when empty and shall be emptied at least every seventy-two (72) hours. In the absence of a temperature-recording device, partial pickups may be permitted as long as the milk storage/holding tank is completely empty, clean and sanitized prior to the next milking. In the event of an emergency situation, such as inclement weather, natural disaster, etc., a variance may be permitted at the discretion of the Regulatory Agency.

ITEM 11r. UTENSILS AND EQUIPMENT - SANITIZATION

The product-contact surfaces of all multi-use containers, equipment and utensils used in the handling, storage or transportation of milk shall be sanitized before each usage.

PUBLIC HEALTH REASON

Mere cleaning of containers, equipment and utensils does not insure the removal or destruction of all disease organisms that may have been present. Even very small numbers remaining may grow to dangerous proportions, since many kinds of disease bacteria grow rapidly in milk. For this reason, all milk containers, utensils and equipment must be treated with an effective sanitizer before each usage.

ADMINISTRATIVE PROCEDURES

This Item is deemed to be satisfied when:

All product-contact surfaces of multi-use containers, utensils and equipment used in the handling, storage or transportation of milk are sanitized before each usage by one of the following methods, or by any method which has been demonstrated to be equally effective:

1. Complete immersion in hot water at a temperature of at least 77ºC (170ºF) for at least five (5) minutes; or exposure to a flow of hot water at a temperature of at least 77ºC (170ºF), as determined by the use of a suitable accurate thermometer, at the outlet, for at least five (5) minutes.
2. Certain chemical compounds are effective for the sanitization of milk utensils, containers, and equipment. These are contained in 21 CFR 178.1010 and shall be used in accordance with label directions. (Refer to Appendix F. for further discussion of approved sanitizing procedures.)

ITEM 12r. UTENSILS AND EQUIPMENT - STORAGE

All containers, utensils and equipment used in the handling, storage or transportation of milk, unless stored in sanitizing solutions, shall be stored to assure complete drainage and shall be protected from contamination prior to use. Provided, that pipeline milking equipment such as milker claws, inflations, weigh jars, meters, milk hoses, milk receivers, tubular coolers, plate coolers and milk pumps which are designed for mechanical cleaning and other equipment, as accepted by FDA, which meets these criteria, may be stored in the milking barn or parlor, provided this equipment is designed, installed and operated to protect the product and solution-contact surfaces from contamination at all times.

PUBLIC HEALTH REASON

Careless storage of milk containers, utensils and equipment, which previously have been properly treated, is apt to result in recontamination of such utensils, thus rendering them unsafe.

ADMINISTRATIVE PROCEDURES

This Item is deemed to be satisfied when:

1. All milk containers, utensils and equipment, including milking machine vacuum hoses, are stored in the milkhouse in a sanitizing solution, or on racks, until used. Pipeline milking equipment such as milker claws, inflations, weight jars, milk hoses, milk receivers, tubular coolers, plate coolers and milk pumps which are designed for mechanical cleaning and other equipment, as accepted by FDA, which meets these criteria, may be mechanically cleaned, sanitized and stored in the milking barn or parlor, provided this equipment is designed, installed and operated to protect the product and solution contact surfaces from contamination at all times. Some of the parameters to be considered in determining protection are:
   a. Proper location of equipment;
   b. Proper drainage of equipment; and
   c. Adequate and properly located lighting and ventilation.
2. The milking barn or parlor must be used only for milking. Concentrates may be fed in the barn during milking but the barn shall not be used for the housing of animals. When manual cleaning of product-contact surfaces is necessary, the cleaning shall be done in the milkhouse. Provided, in the case of a milking parlor that opens directly into an enclosed housing area, through a covered holding area, the holding area may be seasonally enclosed when:
   a. There are no manure pit openings in the parlor, holding area or in the housing area close enough to affect the milking parlor.

b. The cattle holding and housing areas are maintained in good repair and reasonably clean.

c. With respect to dust, odors, rodents and insects, the entire area meets milking parlor standards and the parlor is free of evidence of birds.

In addition, construction and cleanliness items identified above shall be evaluated in the appropriate *Ordinance* Sections.

3. Means are provided to effect complete drainage of equipment when such equipment cannot be stored to drain freely.

4. Clean cans or other containers are stored in the milkhouse within a reasonable time after delivery to the dairy farm.

5. Strainer pads, parchment papers, gaskets and similar single-service articles are stored in a suitable container or cabinet, in a location convenient to their use, and protected against contamination.

ITEM 13r. MILKING - FLANKS, UDDERS AND TEATS

Milking shall be done in the milking barn, stable or parlor. The flanks, udders, bellies and tails of all milking lactating animals shall be free from visible dirt. All brushing shall be completed prior to milking. The udders and teats of all milking lactating animals shall be clean and dry before milking. Teats shall be treated with a sanitizing solution just prior to the time of milking and shall be dry before milking. Wet hand milking is prohibited.

PUBLIC HEALTH REASON

If milking is done elsewhere other than in a suitable place provided for this purpose, the milk may become contaminated. Cleanliness of the lactating animals is one of the most important factors affecting the bacterial count of the milk. Under usual farm conditions, lactating animals contaminate their udders by standing in polluted water or by lying down in the pasture or cowyard. Unless the udders and teats are clean and dry before milking, particles of filth or contaminated water are apt to drop or be drawn into the milk. Such contamination of the milk is particularly dangerous because manure may contain the organisms of brucellosis and tuberculosis, and polluted water may contain the organisms of typhoid fever and other intestinal diseases. Application of sanitizing solutions to the teats, followed by thorough drying just prior to the time of milking, has the advantage of giving an additional margin of safety with reference to such disease organisms as they are not removed by ordinary cleaning and it is helpful in the control of mastitis.

ADMINISTRATIVE PROCEDURES

This Item is deemed to be satisfied when:

1. Milking is done in a milking barn, stable or parlor.
2. Brushing is completed prior to milking.
3. Flanks, bellies, tails and udders are clipped as often as necessary to facilitate cleaning of these areas and are free from dirt. The hair on the udders shall be of such length that it is not incorporated with the teat in the inflation during milking.

4. Udders and teats of all milking animals are clean and dry before milking. Teats shall be cleaned, treated with a sanitizing solution and dry just prior to milking. Provided that the sanitizing of teats shall not be required if the udder is dry and the teats have been thoroughly cleaned (not dry wiped) and dried (manually wiped dry) prior to milking. The determination of what constitutes a dry udder and cleaned and dried teats shall be made by the Regulatory Agency.

NOTE: Additional alternative udder preparation methods may also be used once they have been evaluated by FDA and found acceptable.

5. Wet hand milking is prohibited.

ITEM 14r. PROTECTION FROM CONTAMINATION

Milking and milkhouse operations, equipment and facilities shall be located and conducted to prevent any contamination of milk, containers, utensils and equipment. No milk shall be strained, poured, transferred or stored unless it is properly protected from contamination.
After sanitization, all containers, utensils and equipment shall be handled in such a manner as to prevent contamination of any product-contact surface.
Vehicles used to transport milk from the dairy farm to the milk plant, receiving station or transfer station shall be constructed and operated to protect their contents from sun, freezing and contamination. Such vehicles shall be kept clean, inside and out, and no substance capable of contaminating the milk shall be transported with the milk.

PUBLIC HEALTH REASON

Because of the nature of milk and its susceptibility to contamination by disease producing bacteria and other contaminants, every effort should be made to provide adequate protection for the milk at all times. This should include the proper placement of equipment so that work areas in the milking barn and milkhouse are not overcrowded. The quality of any air that is used for the agitation or movement of milk or is directed at a milk product-contact surface should be such that it will not contaminate the milk.
The effect of sanitization of equipment can be nullified if the equipment is not protected after sanitizing.
To protect milk during transportation, delivery vehicles must be properly constructed and operated.

ADMINISTRATIVE PROCEDURES

This Item is deemed to be satisfied when:

1. Equipment and operations are so located within the milking barn and milkhouse as to prevent overcrowding and contamination of cleaned and sanitized containers, utensils and equipment by splash, condensation or manual contact.

2. During processing, pipelines and equipment, used to contain or conduct milk and milk products, shall be effectively separated from tanks or circuits containing cleaning and/or sanitizing solutions.
3. All milk that has overflowed, leaked, been spilled or improperly handled is discarded.
4. All product-contact surfaces of containers, utensils and equipment are covered or otherwise protected to prevent the access of insects, dust, condensation and other contamination. All openings, including valves and piping attached to milk storage tanks and milk tank trucks, pumps or vats, shall be capped or otherwise properly protected. Gravity type strainers used in the milkhouse do not have to be covered. Milk pipelines used to convey milk from pre-coolers to the bulk milk tank must be fitted with effective drip deflectors.
5. The receiving receptacle is raised above the floor, as on a dolly or cart, or placed at a distance from the lactating animals, to protect it against manure and splash when milk is poured and/or strained in the milking barn, stable or parlor. Such receptacle shall have a tight-fitting cover, which shall be closed, except when milk is being poured.
6. Each pail or container of milk is transferred immediately from the milking barn, stable or parlor to the milkhouse.
7. Pails, cans and other equipment containing milk are properly covered during transfer and storage.
8. Whenever air under pressure is used for the agitation or movement of milk, or is directed at a milk-contact surface, it is free of oil, dust, rust, excessive moisture, extraneous materials and odor, and shall otherwise comply with the applicable standards of Appendix H.
9. Sanitized product-contact surfaces, including bulk milk tank openings and outlets, are protected against contact with unsanitized utensils and equipment, hands, clothing, splash, condensation and other sources of contamination.
10. Any sanitized product-contact surface, which has been otherwise exposed to contamination, is again cleaned and sanitized before being used.
11. Vehicles used to transport milk from the dairy farm to the milk plant, receiving station or transfer station are constructed and operated to protect their contents from sun, freezing and contamination.
12. Vehicles have bodies with solid enclosures and tight, solid doors.
13. Vehicles are kept clean, inside and out.
14. No substance capable of contaminating milk is transported with the milk. (Refer to Items 10p and 11p and Appendix B. for information on the construction of milk tank trucks.)

ITEM 15r. DRUG AND CHEMICAL CONTROL

Cleaners and sanitizers shall be stored in properly identified, dedicated end-use containers.
Animal drugs and drug administration equipment shall be stored in such a way that milk, milking equipment, wash vats and hand sinks are not subject to contamination.
Animal drugs shall be properly labeled and segregated, lactating from non-lactating. Unapproved drugs shall not be used.

PUBLIC HEALTH REASON

Accidental misuse of cleaners or sanitizers can result in adulteration of the milk.
Animal drugs can result in adverse reactions in people sensitive to those residues and can contribute to the development of strains of drug resistant human pathogens.

ADMINISTRATIVE PROCEDURES

This Item is deemed to be satisfied when:

1. Cleaners and sanitizers, used on dairy farms, shall be purchased in containers from the manufacturer or distributor, which properly identify the contents or, if bulk cleaners and sanitizers are transferred from the manufacturer's or distributor's container, that the transfer only occurs into a dedicated end-use container, which is specifically designed and maintained according to the manufacturer's specifications for that specific product. The label on the dedicated end-use container shall include the product name, chemical description, use directions, precautionary and warning statement, first aid instructions, container storage and maintenance instructions and the name and address of the manufacturer or distributor.
2. Equipment used to administer drugs is not cleaned in the wash vats and is stored so as not to contaminate the milk or milk-contact surfaces of equipment.
3. Drugs intended for treatment of non-lactating dairy animals are segregated from those drugs used for lactating animals. Separate shelves in cabinets, refrigerators or other storage facilities satisfy this Item.
4. Drugs shall be properly labeled to include the name and address of the manufacturer or distributor for OTC drugs, or veterinary practitioner dispensing the product for Rx and extra label use drugs.
5. Drug labels shall also include:
    a. Directions for use, and prescribed withholding times;
    b. Cautionary statements, if needed; and
    c. Active ingredient(s) in the drug product.
6. Unapproved and/or improperly labeled drugs are not used to treat dairy animals and are not stored in the milkhouse, milking barn, stable or parlor.
7. Drugs are stored in such a manner that they cannot contaminate the milk or milk product-contact surfaces of the containers, utensils or equipment.

NOTE: Topical antiseptics and wound dressings, unless intended for direct injection into the teat, vaccines and other biologics, and dosage form vitamins and/or mineral products are exempt from labeling and storage requirements, except when it is determined that they are stored in such a manner that they may contaminate the milk or milk product-contact surfaces of containers, utensils or equipment.

ITEM 16r. PERSONNEL - HANDWASHING FACILITIES

Adequate handwashing facilities shall be provided, including a lavatory fixture with hot and cold, or warm running water, soap or detergent and individual sanitary towels, convenient to the milkhouse, milking barn, stable, parlor and flush toilet.

PUBLIC HEALTH REASON

Adequate handwashing facilities are essential to personal cleanliness and minimize the likelihood of contamination of the milk. Handwashing facilities are required in order to increase the assurance that milker's and bulk milk hauler/sampler's hands will be washed.

ADMINISTRATIVE PROCEDURES

This Item is deemed to be satisfied when:

1. Handwashing facilities are located convenient to the milkhouse, milking barn, stable, parlor and flush toilet.
2. Handwashing facilities include soap or detergent, hot and cold, or warm running water, individual sanitary towels and a lavatory fixture. Utensil wash and rinse vats shall not be considered as handwashing facilities.

ITEM 17r. PERSONNEL - CLEANLINESS

Hands shall be washed clean and dried with an individual sanitary towel immediately before milking, before performing any milkhouse function and immediately after the interruption of any of these activities. Milkers and bulk milk hauler/samplers shall wear clean outer garments while milking or handling milk, milk containers, utensils, or equipment.

PUBLIC HEALTH REASON

The reasons for clean hands of the persons doing the milking are similar to those for the cleanliness of the lactating animal's udder. The milker's hands may have been exposed to contamination during the course of their normal duties on the farm and at milking time. Because the hands of all workers frequently come into contact with their clothing it is important that the clothes worn, during milking and the handling of milk, be clean.

ADMINISTRATIVE PROCEDURES

This Item is deemed to be satisfied when:

1. Hands are washed, clean and dried with an individual sanitary towel immediately before milking; before performing any milkhouse function; and immediately after the interruption of any of these activities.
2. Milkers and bulk milk hauler/samplers wear clean outer garments while milking or handling milk containers, utensils or equipment.

ITEM 18r. RAW MILK COOLING

Raw milk for pasteurization shall be cooled to 10ºC (50ºF) or less within four (4) hours or less, of the commencement of the first milking, and to 7ºC (45ºF) or less, within two (2) hours after

the completion of milking. Provided, that the blend temperature after the first milking and subsequent milkings does not exceed 10ºC (50ºF).

PUBLIC HEALTH REASON

Milk produced by disease-free lactating animals and under clean conditions usually contains relatively few bacteria immediately after milking. These can multiply to enormous numbers in a few hours unless the milk is cooled. However, when the milk is cooled quickly to 7ºC (45ºF) or less, there is only a slow increase in the numbers of bacteria.

Usually, the bacteria in milk are harmless, and if this were always true there would be no reason to cool milk, except to delay souring. There is; however, no way for the dairy operator or regulating officer to be absolutely sure that no disease bacteria have entered the milk, even though observance of the other Items of this *Ordinance* will greatly reduce this likelihood. The likelihood of transmitting disease is much increased when the milk contains large numbers of disease bacteria. Therefore, it is extremely important for milk to be cooled quickly, so that small numbers of bacteria, which may have entered the milk, will not multiply.

ADMINISTRATIVE PROCEDURES

This Item is deemed to be satisfied when:

1. Raw milk for pasteurization shall be cooled to 10ºC (50ºF) or less within four (4) hours or less, of the commencement of the first milking, and to 7ºC (45ºF) or less, within two (2) hours after the completion of milking. Provided, that the blend temperature after the first milking and subsequent milkings does not exceed 10ºC (50ºF).
2. Recirculated cooling water, which is used in plate or tubular coolers or heat exchangers, is from a safe source and protected from contamination. Such water shall be tested semiannually and shall comply with the Bacteriological Standards of Appendix G.
3. All farm bulk milk tanks manufactured after January 1, 2000 shall be equipped with an approved temperature-recording device.
   a. The recording device shall be operated continuously and be maintained in a properly functioning manner. Circular charts shall not overlap.
   b. The recording device shall be verified every six (6) months and documented in a manner acceptable to the Regulatory Agency using an accurate (+/- 1°C (2°F)) thermometer that has been calibrated by a traceable standard thermometer, within the past six (6) months, with the results and date recorded and the thermometer being properly identified, or by using a traceable standard thermometer that has been calibrated within the last year.
   c. Recording thermometer charts shall be maintained on the premises for a period of a minimum of six (6) months and available to the Regulatory Agency.
   d. The recording thermometer should be installed in an area convenient to the milk storage tank and acceptable to the Regulatory Agency.
   e. The recording thermometer sensor shall be located to permit the registering of the temperature of the contents when the tank contains no more than ten percent (10%) of its calibrated capacity.
   f. The recording thermometer shall comply with the current technical specifications for tank recording thermometers.

g. A recording thermometer and/or any other device that meets the intent of these Administrative Procedures and technical specifications and is acceptable to the Regulatory Agency can be used to monitor/record the bulk tank temperature.
h. The recording thermometer charts shall properly identify the producer, date, and signature of the person removing the chart.

ITEM 19r. INSECT AND RODENT CONTROL

Effective measures shall be taken to prevent the contamination of milk, containers, utensils and equipment by insects and rodents and by chemicals used to control such vermin. Milkhouses shall be free of insects and rodents. Surroundings shall be kept neat, clean and free of conditions, which might harbor or be conducive to the breeding of insects and rodents. Feed shall be stored in such a manner that it will not attract birds, rodents or insects.

PUBLIC HEALTH REASON

Proper manure disposal reduces the breeding of flies, which are considered capable of transmitting infection by physical contact or through excreta to milk or milk containers, utensils or equipment. Insects visit unsanitary places, they may carry pathogenic organisms on their bodies and they may carry living bacteria for as long as four (4) weeks within their bodies, and they may pass them on to succeeding generations by infecting their eggs. Effective screening tends to prevent the presence of flies, which are a public health menace. Flies may contaminate the milk with microorganisms, which may multiply and become sufficiently numerous to present a public health hazard. The surroundings of a dairy should be kept neat and clean in order to reduce insect and rodent harborages.

ADMINISTRATIVE PROCEDURES

This Item is deemed to be satisfied when:

1. Surroundings are kept neat, clean and free of conditions, which might harbor or be conducive to the breeding of insects and rodents. During fly season, manure shall be spread directly on the fields; or stored for not more than four (4) days in a pile on the ground surface and then spread on the fields; or stored for not more than seven (7) days in an impervious-floored bin, or on an impervious-curbed platform and then spread; or stored in a tight-screened and trapped manure shed; or effectively treated with larvicides; or disposed of in any other manner which controls insect breeding.
2. Manure packs in loafing areas, stables without stanchions, pen stables, resting barns, wandering sheds and free-stall housing are properly bedded and managed to prevent insect breeding.
3. Milkhouses are free of insects and rodents.
4. Milkhouses are effectively screened or otherwise protected against the entrance of vermin.
5. Outer milkhouse doors are tight and self-closing. Screen doors shall open outward.
6. Effective measures are taken to prevent the contamination of milk, containers, utensils and equipment by insects and rodents and by chemicals used to control such vermin. Insecticides and rodenticides, not approved for use in the milkhouse, shall not be stored in the milkhouse.

7. Only insecticides and rodenticides approved for use by the Regulatory Agency and/or registered with EPA are used for insect and rodent control. (Refer to Appendix C. for further information about insect and rodent control.)
8. Insecticides and rodenticides are used only in accordance with the manufacturer's label directions and are used so as to prevent the contamination of milk, milk containers, utensils and equipment, feed and water.
9. Covered boxes, bins or separate storage facilities for ground, chopped or concentrated feeds are provided.
10. Feed may be stored in the milking portion of the barn only in such a manner as will not attract birds, insects or rodents. Open feed dollies or carts may be used for distributing the feed, but not storing feed, in the milking barn. Feed dollies, carts, fully automated feeding systems, or other feed containers may be exempt from the use of covers, provided they do not attract birds, insects, or rodents.

NOTE: Refer to Appendix M. for an inspection form for producer dairy farms, which summarizes the applicable sanitation requirements.

STANDARDS FOR GRADE "A" PASTEURIZED, ULTRA-PASTEURIZED AND ASEPTICALLY PROCESSED MILK AND MILK PRODUCTS

Milk plants shall comply with all Items of this Section.
A receiving station shall comply with Items 1p to 15p, inclusive, and 17p, 20p and 22p, except that the partitioning requirement of Item 5p shall not apply.
A transfer station shall comply with Items 1p, 4p, 6p, 7p, 8p, 9p, 10p, 11p, 12p, 14p, 15p, 17p, 20p and 22p and as climatic and operating conditions require the applicable provisions of Items 2p and 3p. Provided, that in every case, overhead protection shall be provided.
Facilities for the cleaning and sanitizing of milk tank trucks shall comply with Items 1p, 4p, 6p, 7p, 8p, 9p, 10p, 11p, 12p, 14p, 15p, 20p and 22p and as climatic and operating conditions require, the applicable provisions of Items 2p and 3p. Provided, that in every case, overhead protection shall be provided.
In the case of milk plants, receiving stations and transfer stations, which have HACCP Systems regulated under Appendix K. of this *Ordinance*, the HACCP System shall address the public health concerns described in this Section in a manner that provides protection equivalent to the requirements in this Section.
Milk plants that have HACCP Systems, which are regulated under the NCIMS HACCP Program, shall comply with all of the requirements of Item 16p. Pasteurization and Aseptic Processing of this *Ordinance*, and pasteurization shall be managed as a CCP as described in Appendix H. MILK AND MILK PRODUCT CONTINUOUS-FLOW (HTST AND HHST) PASTEURIZATION---CCP MODEL HACCP PLAN SUMMARY; and MILK AND MILK PRODUCT VAT (BATCH) PASTEURIZATION---CCP MODEL HACCP PLAN SUMMARY.

ITEM 1p. FLOORS - CONSTRUCTION

The floors of all rooms in which milk or milk products are handled, processed, packaged, or stored; or in which milk containers, utensils and/or equipment are washed, shall be constructed of concrete or other equally impervious and easily cleanable material; and shall be smooth, properly sloped, provided with trapped drains and kept in good repair. Provided, that cold-storage rooms used for storing milk and milk products need not be provided with floor drains when the floors are sloped to drain to one (1) or more exits. Provided further, that storage rooms for storing dry ingredients, packaged dry ingredients, packaged dry milk or milk products, and/or packaging materials need not be provided with drains and the floors may be constructed of tightly joined wood.

PUBLIC HEALTH REASON

Floors constructed of concrete or other similarly impervious material can be kept clean more easily than floors constructed of wood or other pervious or easily disintegrating material. They will not absorb organic matter and are; therefore, more apt to be kept clean and free of odors. Properly sloped floors facilitate flushing and help to avoid undesirable conditions. Trapping of drains prevents sewer gas from entering the milk plant.

ADMINISTRATIVE PROCEDURES

This Item is deemed to be satisfied when:

1. The floors of all rooms in which milk or milk products are handled, processed, packaged, or stored; or in which milk containers, utensils, and/or equipment are washed, are constructed of good quality concrete, or equally impervious tile or brick laid closely with impervious joint material, or metal surfacing with impervious joints, or other material which is the equivalent of good quality concrete. The floors of storage rooms for dry ingredients and/or packaging material may be constructed of tightly joined wood.
2. The floor surface is smooth and sloped, so that there are no pools of standing water after flushing, and the joints between the floor and the walls are impervious.
3. The floors are provided with trapped drains. Cold-storage rooms used for storing milk and milk products need not be provided with floor drains when the floors are sloped to drain to one or more exits. Storage rooms for dry ingredients, dry packaged milk or milk products, and/or packaging materials need not be provided with drains.

NOTE: Refer to Item 11p for requirements for floors of drying chambers.

ITEM 2p. WALLS AND CEILINGS - CONSTRUCTION

Walls and ceilings of rooms in which milk or milk products are handled, processed, packaged, or stored; or in which milk containers, utensils and/or equipment are washed, shall have a smooth, washable, light-colored surface and be in good repair.

PUBLIC HEALTH REASON

Properly finished walls and ceilings are more easily kept clean and are; therefore, more apt to be kept clean. A light-colored finish aids in the even distribution of light and the detection of unclean conditions.

ADMINISTRATIVE PROCEDURES

This Item is deemed to be satisfied when:

1. Walls and ceilings are finished with smooth, washable, light-colored impervious materials.
2. Walls, partitions, windows and ceilings are kept in good repair.

NOTE: Refer to Item 11p for requirements for walls for drying chambers. Storage rooms used for the storage of packaged dry milk or milk products are exempt from the ceiling requirements of this Item.

ITEM 3p. DOORS AND WINDOWS

Effective means shall be provided to prevent the access of insects and rodents. All openings to the outside shall have solid doors or glazed windows, which shall be closed during dusty weather.

PUBLIC HEALTH REASON

Freedom from insects in the milk plant reduces the likelihood of contamination of the milk or milk product. (Refer to Item 7r-Public Health Reason for information on disease transmission by flies.)

ADMINISTRATIVE PROCEDURES

This item is deemed to be satisfied when:

1. All openings to the outer air are effectively protected by:
   a. Screening; or
   b. Effective electric screen panels; or
   c. Fans or air curtains which provide sufficient air velocity so as to prevent the entrance of insects; or
   d. Properly constructed flaps where it is impractical to use self-closing doors or air curtains; or
   e. Any effective combination of a, b, c, or d or by any other method which prevents the entrance of insects.
2. All outer doors are tight and self-closing. Screen doors shall open outward.
3. All outer openings are rodent-proofed to the extent necessary to prevent the entry of rodents.

NOTE: The evidence of insects and/or rodents in the milk plant shall be considered under Item 9p.

ITEM 4p. LIGHTING AND VENTILATION

All rooms in which milk or milk products are handled, processed, packaged, or stored; or in which milk containers, utensils and/or equipment are washed shall be well lighted and well ventilated.

PUBLIC HEALTH REASON

Ample light promotes cleanliness. Proper ventilation reduces odors and prevents condensation upon interior surfaces.

ADMINISTRATIVE PROCEDURES

This Item is deemed to be satisfied when:

1. Adequate light sources are provided (natural, artificial or a combination of both) which furnish at least twenty (20) foot-candles (220 lux) of light in all working areas. This shall apply to all rooms where milk or milk products are handled, processed, packaged, or stored; or where containers, utensils and/or equipment are washed. Dry storage and cold storage rooms shall be provided with at least five (5) foot-candles (55 lux) of light.
2. Ventilation in all rooms is sufficient to keep them reasonably free of odors and excessive condensation on equipment, walls and ceilings.
3. Pressurized ventilating systems, if used, have a filtered air intake.
4. For milk plants that condense and/or dry milk or milk products, ventilating systems in packaging rooms, where used, are separate systems and where possible have the ducts installed in a vertical position.

ITEM 5p. SEPARATE ROOMS

There shall be separate rooms for:

1. The pasteurizing, processing, cooling, reconstitution, condensing, drying and packaging of milk and milk products.
2. Packaging of dry milk or milk products.
3. The cleaning of milk cans and containers, bottles, cases and dry milk or milk product containers.
4. The fabrication of containers and closures for milk and milk products.
5. Cleaning and sanitizing facilities for milk tank trucks in milk plants receiving milk or whey in such tanks.
6. Receiving cans of milk and milk products in milk plants receiving such cans.

Rooms in which milk or milk products are handled, processed, stored, condensed, dried and packaged, or in which containers, utensils and/or equipment are washed or stored, shall not open directly into any stable or any room used for domestic purposes. All rooms shall be of sufficient size for their intended purposes.
Designated areas or rooms shall be provided for the receiving, handling and storage of returned packaged milk and milk products.

PUBLIC HEALTH REASON

If the washing and sanitization of containers are conducted in the same room in which the pasteurizing, processing, cooling, condensing, drying or packaging is done, there is opportunity for the pasteurized product to become contaminated. For this reason, separate rooms are required as indicated. The unloading of cans of raw milk directly into the pasteurizing room is apt to increase the prevalence of insects therein, as well as to render it too public.

ADMINISTRATIVE PROCEDURES[7]

This Item is deemed to be satisfied when:

1. Pasteurizing, processing, reconstitution, cooling, condensing, drying and packaging of milk and milk products are conducted in a single room(s), but not in the same room(s) used for the cleaning of milk cans, portable storage bins, bottles and cases, or the unloading and/or cleaning and sanitizing of milk tank trucks, provided that these rooms may be separated by solid partitioning doors that are kept closed. Provided further, that cooling, plate or tubular, may be done in the room where milk tank trucks are unloaded and/or cleaned and sanitized. Separation/clarification of raw milk may be done in an enclosed room where milk tank trucks are unloaded and/or cleaned and sanitized.

NOTE: Packaging of dry milk or milk products shall be conducted in a separate room.

2. All returned packaged milk and milk products, which have physically left the premises of the processing milk plant, shall be received, handled and stored in separate areas or rooms isolated from the Grade "A" dairy operations. Such separate areas or rooms shall be clearly defined and marked for such use.
3. All bulk milk and milk product storage tanks are vented into a room used for pasteurization, processing, cooling or packaging operations or into a storage tank gallery room. Provided, that vents located elsewhere, which are adequately equipped with air filters so as to preclude the contamination of the milk or milk product shall be considered satisfactory.
4. Facilities for the cleaning and sanitizing of milk tank trucks are properly equipped for manual and/or mechanical operations. When such facilities are not provided on the milk plant premises, these operations shall be performed at a receiving station, transfer station or separate milk tank truck cleaning facility. Items relating to facilities for cleaning and sanitizing milk tank trucks are listed at the beginning of this Section.
5. Rooms in which milk or milk products are handled, processed or stored; or in which milk containers, utensils and/or equipment are washed or stored, do not open directly into any stable or any room used for domestic purposes.
6. All rooms shall be of sufficient size for their intended purposes.

ITEM 6p. TOILET-SEWAGE DISPOSAL FACILITIES

Every milk plant shall be provided with toilet facilities conforming to the regulations of the ... of ...[1] Toilet rooms shall not open directly into any room in which milk and/or milk products are processed. Toilet rooms shall be completely enclosed and shall have tight-fitting, self-closing doors. Dressing rooms, toilet rooms and fixtures shall be kept in a clean condition, in good repair and shall be well ventilated and well lighted. Sewage and other liquid wastes shall be disposed of in a sanitary manner.

PUBLIC HEALTH REASON

Human excreta are potentially dangerous and must be disposed of in a sanitary manner. The organisms causing typhoid fever, para-typhoid fever and dysentery may be present in the body discharges of active cases or carriers. Sanitary toilet facilities are necessary to protect the milk or milk product, containers, utensils and equipment from fecal contamination, which may be carried by insects, hands or clothing. When the toilet facilities are of a satisfactory type, are kept clean and are in good repair, the opportunities for the spread of contamination by the above means are

minimized. The provision of an intervening room or vestibule between the toilet room and any room in which milk or milk products are processed, condensed or dried makes it less likely that contaminated insects will enter these rooms. It will also minimize the spread of odors.
The wastes resulting from the cleaning and rinsing of containers, utensils, equipment and floors, from flush toilets, and from washing facilities, should be properly disposed of so as not to contaminate the milk containers, utensils or equipment, or to create a nuisance or a public health hazard.

ADMINISTRATIVE PROCEDURES

This Item is deemed to be satisfied when:

1. The milk plant is provided with toilet facilities conforming to the regulations of the ... of ...[1]
2. Toilet rooms do not open directly into any room in which milk and/or milk products are processed, condensed or dried.
3. Toilet rooms are completely enclosed and have tight-fitting, self-closing doors.
4. Dressing rooms, toilet rooms and fixtures are kept in a clean condition, in good repair and are well ventilated and well lighted.
5. Toilet tissue and easily cleanable covered waste receptacles are provided in toilet rooms.
6. All plumbing is installed to meet the applicable provisions of the State or local plumbing code.
7. Sewage and other liquid wastes are disposed of in a sanitary manner.
8. Non-water-carried sewage disposal facilities are not used.

ITEM 7p. WATER SUPPLY

Water for milk plant purposes shall be from a supply properly located, protected and operated and shall be easily accessible, adequate and of a safe, sanitary quality.

PUBLIC HEALTH REASON

The water supply should be accessible in order to encourage its use in cleaning operations; it should be adequate so that cleaning and rinsing may be thorough; and it should be of a safe, sanitary quality in order to avoid the contamination of containers, utensils and equipment.

ADMINISTRATIVE PROCEDURES[8]

This Item is deemed to be satisfied when:

1. Water for milk plant purposes is from an adequate supply, properly located, protected and operated. It shall be easily accessible and of a safe, sanitary quality.
2. The water supply is approved as safe by the State Water Control Authority and, in the case of individual water systems, complies with the specification outlined in Appendix D. and the Bacteriological Standards outlined in Appendix G.
3. There is no cross-connection between the safe water supply and any unsafe or questionable water supply, or any source of pollution through which the safe water supply might become

contaminated. A connection between the water supply piping and a make-up tank, such as for cooling or condensing, unless protected by an air gap or effective backflow preventer, constitutes a violation of this requirement. An approved air gap is defined as the unobstructed vertical distance through the free atmosphere of at least twice the diameter of the largest incoming water supply pipe or faucet to the flood level of the vessel or receptacle. The distance of the air gap is to be measured from the bottom of the potable inlet supply pipe or faucet to the top of the effective overflow, i.e., flood level rim or internal overflow, of the vessel. In no case, may the effective air gap be less than one (1) inch (2.54 cm).

4. Condensing water for milk or milk product evaporators, and water used to produce vacuum and/or to condense vapors in vacuum heat processing equipment, is from a source complying with Item 2 above. Provided, that when approved by the Regulatory Agency, water from sources not complying with Item 2 above, may be used when the evaporator or vacuum heat equipment is constructed and operated to preclude contamination of such equipment, or its contents, by condensing water or by water used to produce vacuum. Means of preventing such contamination are:

   a. Use of a surface type condenser in which the condensing water is physically separated from the vapors and condensate; or

   b. Use of reliable safeguards to prevent the overflow of condensing water from the condenser into the evaporator. Such safeguards include a barometric leg extending at least thirty-five (35) feet vertically from the invert of the outgoing condensing water line to the free level at which the leg discharges, or a safety shutoff valve, located on the water feed line to the condenser, automatically actuated by a control which will shut off the in-flowing water when the water level rises above a predetermined point in the condenser. This valve may be actuated by water, air or electricity, and shall be designed so that failure of the primary motivating power will automatically stop the flow of water into the condenser.

5. Condensing water for milk or milk product evaporators, complying with Item 2 above, and water reclaimed from milk or milk products may be reused when all necessary means of protection are afforded and it complies with the procedures outlined in Appendix D., Part V.

6. New individual water supplies and water supply systems, which have been repaired or otherwise become contaminated, are disinfected before being placed in use. (Refer to Appendix D.) The supply shall be made free of the disinfectant by pumping to waste before any sample for bacteriological testing shall be collected.

7. Samples for bacteriological testing of individual water supplies are taken upon the initial approval of the physical structure; each six (6) months thereafter; and when any repair or alteration of the water supply system has been made. Samples shall be taken by the Regulatory Agency and examinations shall be conducted in an official laboratory. To determine if water samples have been taken at the frequency established in this Section, the interval shall include the designated six (6) month period plus the remaining days of the month in which the sample is due.

8. Current records of water test results are retained on file with the Regulatory Agency or as the Regulatory Agency directs.

9. A potable water supply, which meets the criteria of this Section, may be connected to the product feed line of a steam vacuum evaporator, provided that the water supply is protected at the point of connection by an approved backflow prevention device.

ITEM 8p. HANDWASHING FACILITIES

Convenient handwashing facilities shall be provided, including hot and cold and/or warm running water, soap and individual sanitary towels or other approved hand-drying devices. Handwashing facilities shall be kept in a clean condition and in good repair.

PUBLIC HEALTH REASON

Proper use of handwashing facilities is essential to personal cleanliness and reduces the likelihood of contamination of milk and milk products.

ADMINISTRATIVE PROCEDURES

This Item is deemed to be satisfied when:

1. Convenient handwashing facilities are provided, including hot and cold and/or warm running water, soap and individual sanitary towels or other approved hand-drying devices.
2. Handwashing facilities are convenient to all toilets and to all rooms in which milk plant operations are conducted.
3. Handwashing facilities are kept in a clean condition and in good repair.
4. Steam-water mixing valves and vats for washing bottles, cans and similar equipment are not used as handwashing facilities.

ITEM 9p. MILK PLANT CLEANLINESS

All rooms in which milk and milk products are handled, processed or stored; or in which containers, utensils and/or equipment are washed or stored, shall be kept clean, neat and free of evidence of insects and rodents. Only equipment directly related to processing operations or the handling of containers, utensils and equipment shall be permitted in the pasteurizing, processing, cooling, condensing, drying, packaging, and bulk milk or milk product storage rooms.

PUBLIC HEALTH REASON

Clean floors, free of litter, clean walls, ceilings and all other areas of the milk plant are conducive to clean milk and milk product handling operations. Cleanliness and freedom from insects and rodents reduces the likelihood of contamination of the milk or milk product. Excess or unused equipment or equipment not directly related to the milk plant operations can be detrimental to the cleanliness of the milk plant.

ADMINISTRATIVE PROCEDURES

This Item is deemed to be satisfied when:

1. Only equipment directly related to processing operations or the handling of containers, utensils and equipment is permitted in the pasteurizing, processing, cooling, condensing, drying, packaging, and bulk milk or milk product storage rooms.

2. All piping, floors, walls, ceilings, fans, shelves, tables and the non-product-contact surfaces of other facilities and equipment are clean.
3. No trash, solid waste or waste dry product is stored within the milk plant, except in covered containers. Waste containers at the packaging machine or bottle washer may be uncovered during the operation of such equipment.
4. All rooms in which milk and milk products are handled, processed or stored; or in which containers, utensils, and/or equipment are washed or stored, are kept clean, neat and free of evidence of insects and rodents.
5. Excessive product dust shall be kept under effective control by the use of exhaust and collective systems designed for in-plant dust control. Tailings and materials collected from exhaust collective systems shall not be used for human consumption.

ITEM 10p. SANITARY PIPING

All sanitary piping, fittings and connections which are exposed to milk and milk products or from which liquids may drip, drain or be drawn into milk and milk products shall consist of smooth, impervious, corrosion-resistant, non-toxic, easily cleanable material, which is approved for milk product-contact surfaces. All piping shall be in good repair. Pasteurized milk and milk products shall be conducted from one piece of equipment to another only through sanitary piping.[9]

PUBLIC HEALTH REASON

Milk piping and fittings are sometimes so designed as to be difficult to clean, or they may be constructed of metal, which corrodes easily. In either case, it is unlikely that they will be kept clean. Sanitary milk piping is a term, which applies to properly designed and properly constructed piping. The purpose of the third sentence is to prevent exposure of the pasteurized milk or milk product to contamination.

ADMINISTRATIVE PROCEDURES

This Item is deemed to be satisfied when:

1. All sanitary piping, fittings and connections, which are exposed to milk or milk products or from which liquids may drip, drain or be drawn into milk or milk products, consist of smooth, impervious, corrosion-resistant, non-toxic, easily cleanable material.
2. All sanitary piping, connections and fittings consist of:
   a. Stainless steel of the AISI 300 series; or
   b. Equally corrosion-resistant metal which is non-toxic and nonabsorbent; or
   c. Heat resistant glass; or
   d. Plastic, or rubber and rubber-like materials which are relatively inert, resistant to scratching, scoring, decomposition, crazing, chipping and distortion under normal use conditions; are non-toxic, fat resistant, relatively nonabsorbent; which do not impart flavor or odor to the milk or milk product; and which maintain their original properties under repeated use conditions, may be used for gaskets, sealing applications and for short flexible takedown jumpers or connections where flexibility is required for essential or functional reasons.

3. Sanitary piping, fittings and connections are designed to permit easy cleaning; kept in good repair; free of breaks or corrosion; and contain no dead ends of piping in which milk or milk product may collect.
4. All interior surfaces of demountable piping, including valves, fittings and connections are designed, constructed and installed to permit inspection and drainage.
5. All mechanically cleaned milk pipelines and return-solution lines are rigid, self-draining and so supported to maintain uniform slope and alignment. Return solution lines shall be constructed of material meeting the specifications of Item 2 above. If gaskets are used, they shall be self-positioning, of material meeting the specifications outlined in Item 2 above and designed, finished and applied to form a smooth, flush interior surface. If gaskets are not used, all fittings shall have self-positioning faces designed to form a smooth, flush interior surface. All interior surfaces of welded joints in pipelines shall be smooth and free from pits, cracks or inclusions.
In the case of welded lines, all welds shall be inspected as they are made and such welds shall be approved by the Regulatory Agency.
Each cleaning circuit shall have access points for inspection in addition to the entrances and exits. These may be valves, removable sections, fittings or other means or combinations that are adequate for the inspection of the interior of the line. These access points shall be located at sufficient intervals to determine the general condition of the interior surfaces of the pipeline.
Detailed plans for welded pipeline systems shall be submitted to the Regulatory Agency for written approval prior to installation. No alteration or addition shall be made to any welded milk pipeline system without prior written approval from the Regulatory Agency.
6. Pasteurized milk and milk products are conducted from one piece of equipment to another only through sanitary milk piping.
7. For milk plants that dry milk or milk products, because of the high pressure required to obtain proper dispersal of the product in the drying chamber, the pipeline between the high pressure pump and the dryer nozzle may be connected with pressure-tight threaded fittings, or may be welded.

ITEM 11p. CONSTRUCTION AND REPAIR OF CONTAINERS AND EQUIPMENT

All multi-use containers and equipment that milk and milk products come into contact with shall be of smooth, impervious, corrosion-resistant, non-toxic material; shall be constructed for ease of cleaning; and shall be kept in good repair. All single-service containers, closures, gaskets and other articles that milk and milk products come in contact with shall be non-toxic and shall have been manufactured, packaged, transported and handled in a sanitary manner. Articles intended for single-service use shall not be reused.

PUBLIC HEALTH REASON

When equipment is not constructed and located so that it can be cleaned easily, and is not kept in good repair, it is unlikely that it will be properly cleaned.
Single-service articles, which have not been manufactured and handled in a sanitary manner, may contaminate the milk or milk product.

ADMINISTRATIVE PROCEDURES

This Item is deemed to be satisfied when:

1. All multi-use containers and equipment that milk and milk products come into contact with are of smooth, impervious, corrosion-resistant and non-toxic material.
2. All milk and milk product-contact surfaces of multi-use containers and equipment consist of:
   a. Stainless steel of the AISI 300 series; or
   b. Equally corrosion-resistant metal which is non-toxic and nonabsorbent; or
   c. Heat resistant glass; or
   d. Plastic or rubber and rubber-like materials which are relatively inert, resistant to scratching, scoring, decomposition, crazing, chipping and distortion under normal use conditions; which are non-toxic, fat resistant, relatively nonabsorbent and do not impart flavor or odor to the milk or milk product; and which maintain their original properties under repeated use conditions.
3. All joints in containers, utensils and equipment are flush and finished as smooth as adjoining surfaces, or if the surface is vitreous, it must be continuous. Tile floors are not acceptable in dryers. Joints on equipment coming in contact with dry milk or milk products only or used for hot air piping may be sealed by other acceptable means. Where a rotating shaft is inserted through a surface with which milk or milk products come into contact, the joint between the moving and stationary surfaces shall be close-fitting. Grease and oil from gears, bearings, and cables shall be kept out of the milk and milk products. Where a thermometer or temperature-sensing element is inserted through a surface, with which milk or milk products come into contact, a pressure-tight seal shall be provided ahead of all threads and crevices.
4. All openings in covers of tanks, vats, separators, etc. are protected by raised edges, or otherwise, to prevent the entrance of surface drainage. Condensation-diverting aprons shall be provided as close to the tank or vat as possible on all pipes, thermometers, or temperature sensing elements and other equipment extending into a tank, bowl, vat or similar equipment, unless a watertight joint is provided.
5. All surfaces with which milk or milk products come into contact, except pneumatic ducts and cyclonic or air separator collectors, are easily accessible or demountable for manual cleaning or are designed for mechanical cleaning. Provided, that flexible plastic or rubber tanker loading and unloading hoses with screw-type hose clamps shall be considered in compliance, if an appropriate screwdriver or tool is readily available for disassembly. All product-contact surfaces shall be readily accessible for inspection and shall be self-draining.
6. There are no threads used in contact with milk or milk products except where needed for functional and safety reasons, such as in clarifiers, pumps and separators. Such threads shall be of a sanitary type, except those used on high-pressure lines between the high pressure pump and the dryer nozzle.
7. All multi-use containers and other equipment have rounded corners; are in good repair; and free from breaks, crevices and corrosion. Milk cans shall have umbrella-type covers.
8. Strainers, if used, are of perforated metal design and so constructed as to utilize single-service strainer media. Multiple-use, woven material shall not be used for straining milk. Provided, that when required for functional reasons inherent to the production of certain milk products, such as buttermilk, whey, dry whey, and dry milk products, woven material may be used where it is impractical to use perforated metal. However, woven material parts shall be

mechanically cleaned by such methods that thoroughly clean the woven material and do not contaminate the product.

9. Sifters for dry milk products are so constructed as to utilize single-service or multi-service use strainer media conforming with:
   a. Plastic materials listed in 2.d. above; or
   b. Woven stainless steel wire conforming to 2.a. above; or
   c. Cotton, linen, silk, or synthetic fibers which are non-toxic, relatively insoluble, easily cleanable and do not impart a flavor to the product.

Tailings shall be continuously discharged from sifters through dust-tight connections to an enclosed container and shall not be used for human consumption.

10. All single-service containers, closures, gaskets and other articles that milk or milk products come in contact with are non-toxic.

11. The manufacture, packing, transportation and handling of single-service containers, closures, caps, gaskets and similar articles comply with the requirements of Appendix J. Standards for the Fabrication of Single-Service Containers and Closures for Milk and Milk Products. Provided, that all paper, plastics, foil, adhesives, and other components of containers used in the packaging of milk or milk products that have been condensed and/or dried shall be free from deleterious substances and comply with the requirements of the FFD&C Act.

Inspections and tests shall be made by the Regulatory Agency or any Agency authorized by them.

NOTE: 3-A Sanitary Standards for dairy equipment are promulgated jointly by the Sanitary Standards Subcommittee of the Dairy Industry Committee, the Committee on Sanitary Procedure of the International Association for Food Protection and the Milk Safety Branch, Center for Food Safety and Applied Nutrition, Food and Drug Administration, Public Health Service, Department of Health and Human Services. Equipment manufactured in conformity with 3-A Sanitary Standards complies with the sanitary design and construction standards of this *Ordinance*.

ITEM 12p. CLEANING AND SANITIZING OF CONTAINERS AND EQUIPMENT

The product-contact surfaces of all multi-use containers, utensils and equipment used in the transportation, processing, condensing, drying, packaging, handling, and storage of milk or milk products shall be effectively cleaned and shall be sanitized before each use. Provided, that cloth-collector systems used on dryers shall be cleaned and sanitized or purged at intervals and by methods recommended by the manufacturer and approved by the Regulatory Agency. Provided further, that piping, equipment and containers used to process, conduct or package aseptically processed milk and milk products, beyond the final heat treatment process, shall be sterilized before any aseptically processed milk or milk product is packaged and shall be re-sterilized whenever any nonsterile product has contaminated it.

PUBLIC HEALTH REASON

Milk and milk products cannot be kept clean and safe, if permitted to come into contact with containers, utensils and equipment that have not been properly cleaned and sanitized.

ADMINISTRATIVE PROCEDURES

This Item is deemed to be satisfied when:

1. All multi-use containers and utensils are thoroughly cleaned after each use and all equipment is thoroughly cleaned at least once each day used, unless the Regulatory Agency has reviewed and accepted information, in consultation with FDA, supporting the cleaning of multi-use containers and utensils at frequencies extending beyond one (1) day or seventy-two (72) hours in the case of storage tanks, or forty-four (44) hours in the case of evaporators, which are continuously operated. Supporting information shall be submitted to and approved by the Regulatory Agency prior to initiating the qualification period if required. Finished product produced during an extended run must meet all applicable requirements of Section 7 of this *Ordinance*. Any significant equipment or processing changes shall be communicated to the Regulatory Agency, and may result in a re-verification of the extended run proposal, if it is determined that the change could potentially affect the safety of the finished milk or milk product(s).

The supporting information may include but is not limited to:

a. Statement of proposal, including desired cleaning frequency.
b. Product and equipment description.
c. Intended use and consumers.
d. Distribution and storage temperatures of product.
e. Diagram of process of interest.
f. Process parameters, including temperature and times.
g. Hazard evaluation and safety assessment.
h. Review of equipment for sanitary design.
i. When indicated by a hazard evaluation and safety assessment, a plan for initial qualification shall be developed to address identified critical process parameters.

Otherwise, storage tanks shall be cleaned when emptied and shall be emptied at least every seventy-two (72) hours. Records must be available to verify that milk storage in these tanks does not exceed seventy-two (72) hours. These records shall be available for at least the previous three (3) months or from the time of the last regulatory inspection, whichever is longer. In the case of pasteurized storage tanks, which are mechanically cleaned at intervals of less than seventy-two (72) hours, the mechanical cleaning records required under Item 2.b. of this Section shall be considered adequate. Storage tanks, which are used to store raw milk or milk products or heat-treated milk products longer than twenty-four (24) hours and silo tanks used for the storage of raw milk or milk products or heat-treated milk products shall be equipped with a seven (7) day temperature recording device complying with the specifications of Appendix H. Otherwise provided, evaporators shall be cleaned at the end of a continuous operation, not to exceed forty-four (44) hours, and records must be available to verify that the operation time does not exceed forty-four (44) hours.

Drying equipment, cloth-collector systems, packaging equipment and multi-use dry milk products and dry whey storage containers are cleaned at intervals and by methods recommended by the manufacturer and approved by the Regulatory Agency. Such methods may include cleaning without water by use of vacuum cleaners, brushes, or scrapers. After cleaning, such equipment is sanitized by a method approved by the Regulatory Agency. Cloth collector systems and all dry product-contact surfaces downstream from the dryer shall be sanitized or purged at

intervals and by methods recommended by the manufacturer and approved by the Regulatory Agency. Storage bins used to transport dry milk or milk products shall be dry cleaned after each usage and washed and sanitized at regular intervals.

NOTE: Appendix F. contains additional information on dry cleaning of drying equipment, packaging equipment, and dry milk product and dry whey storage containers.

All milk tank trucks that transport Grade "A" milk and milk products, shall be washed and sanitized at a permitted milk plant, receiving station, transfer station, or milk tank truck cleaning facility. The milk tank truck shall be cleaned and sanitized prior to its first use. When the time elapsed after cleaning and sanitizing, and before its first use, exceeds ninety-six (96) hours the tank must be re-sanitized.

NOTE: Appendix B. contains additional information on the cleaning and sanitizing requirements for milk tank trucks.

Whenever a milk tank truck has been cleaned and sanitized, as required by the Regulatory Agency, it shall bear a tag or a record shall be made showing the date, time, place and signature or initials of the employee or contract operator doing the work, unless the milk tank truck delivers to only one receiving facility where responsibility for cleaning and sanitizing can be definitely established without tagging. The tag shall be removed at the location where the milk tank truck is next washed and sanitized and kept on file for fifteen (15) days as directed by the Regulatory Agency.

2. Pipelines and/or equipment designed for mechanical cleaning meet the following requirements:

a. An effective cleaning and sanitizing regimen for each separate cleaning circuit shall be followed.

b. A temperature recording device, complying with the specifications in Appendix H., or a recording device which provides sufficient information to adequately evaluate the cleaning and sanitizing regimen and which is approved by the Regulatory Agency, shall be installed in the return solution line or other appropriate area to record the temperature and time which the line or equipment is exposed to cleaning and sanitizing solutions. For purposes of this Section, recording devices which produce records not meeting the specifications of Appendix H. may be acceptable if:

(1) The device provides a continuous record of the monitoring of the cleaning cycle time and temperature, cleaning solution velocity or cleaning pump operation and the presence or strength of cleaning chemicals for each cleaning cycle.

(2) The record shows a typical pattern of each circuit cleaned, so that changes in the cleaning regimen may be readily detected.

(3) Electronic storage of required cleaning records, with or without hard copy printouts, may be acceptable, provided, the electronically generated records are readily available. Electronic records must meet the criteria of this Section and those provisions of Appendix H., which are determined to be applicable by the Regulatory Agency and FDA. Except that, electronic storage of required cleaning records, with or without hard copy, shall be acceptable, provided the computer and computer generated records are readily available and meet the criteria of this Section and the 21 CFR Part 11.

c. Cleaning charts and electronically stored records required by this Section shall be identified, dated and retained for three (3) months or until the next regulatory inspection, whichever is longer.

d. During each official inspection, the Regulatory Agency shall examine charts and records to verify the cleaning regimens.

3. Milk plants in which containers are washed manually are equipped with a two (2)-compartment wash-and-rinse vat for this purpose. Such milk plants shall also provide a steam cabinet or individual steam-jet plate with hood for sanitizing of cleaned containers, or if sanitizing is done with chemicals, a third treatment vat.

4. In milk plants utilizing automatic bottle washers, such washers must provide for bactericidal treatment by means of steam, hot water or chemical treatment. In soaker-type bottle washers, in which bactericidal treatment depends upon the causticity of the washing solution, the caustic strength for a given soaking time and temperature shall be as specified in the following table, which lists the combinations of causticity, time and temperature, of equal bactericidal value, for the soaker tank of soaker-type bottle washers:

Table 2. Combinations of Causticity, Time and Temperature, of Equal Bactericidal Value, for the Soaker Tank of Soaker-Type Bottle Washers

(Based on NSDA Specifications for beverage bottles)

	Temperature, Degrees						
C	77	71	66	60	54	49	43
F	170	160	150	140	130	120	110
Time in Minutes	**Concentration of NaOH (percent)**						
3	0.57	0.86	1.28	1.91	2.86	4.27	6.39
5	0.43	0.64	0.96	1.43	2.16	3.22	4.80
7	0.36	0.53	0.80	1.19	1.78	2.66	3.98

NOTE: The National Soft Drink Association (NSDA), Washington, D.C. 20036 alkali test, the NSDA caustic test, or other suitable test may be used to determine the strength of the soaker solution. The caustic strength shall be tested monthly by the Regulatory Agency.

When caustic is so used, subsequent final rinsing of the bottles shall be with water, which has been treated with heat or chemicals to assure freedom from viable pathogenic or otherwise harmful organisms, to prevent recontamination of the treated bottle during the rinsing operation.

5. All multi-use containers, utensils and equipment are sanitized before use, employing one or a combination of the methods prescribed under Item 11r. Additionally, for milk plants that condense or dry milk or milk products the following methods are acceptable, or any other method, which has been demonstrated to be equally efficient:
   a. Exposure to an enclosed jet of steam for not less than 1 minute.
   b. Exposure to hot air at a temperature of at least 83°C (180°F) for at least twenty (20) minutes as measured by an acceptable indicating thermometer located in the coldest zone.

Assembled equipment must be sanitized prior to each day's run, unless FDA and the Regulatory Agency have reviewed and accepted information supporting the sanitizing of multi-use containers, utensils and equipment at frequencies extending beyond one (1) day. Tests to determine the efficiency of sanitization should be made by the Regulatory Agency at intervals sufficient to satisfy the Regulatory Agency that the sanitization process is effective. Provided, that all piping, equipment and containers used to conduct, process or package aseptically processed milk and milk products, beyond the final heat treatment process, shall be sterilized by heat, chemical sterilant(s) or other appropriate treatment before use and resterilized whenever it has been contaminated by nonsterile product.

For milk plants that dry milk or milk products, higher temperatures and longer periods may be necessary for the sanitization of high-pressure lines. It has been demonstrated that alkaline cleaners at 72ºC (160ºF) for thirty (30) minutes, followed by an acid cleaner for thirty (30) minutes at the same temperature, produce satisfactory results. Studies have indicated that effective sanitization of the dryer may be accomplished by the following procedure:
   a. Operate the spray nozzles with water at a temperature and rates at least as high as those employed during the drying operation.
   b. Adjust airflow to give at least 0.5 inch (water) pressure in the drying chamber.
   c. Continue the operation for twenty (20) minutes while a temperature of not less than 85ºC (185ºF) is being registered at the discharge from the dryer.

Portions of the drying system not reached by this treatment or dryers in which this procedure is not practical shall be treated by one of the methods prescribed above, or by other methods of demonstrated effectiveness.

6. a. The residual bacteria count of multi-use containers and closures shall be conducted as outlined in Appendix J. The residual bacteria count of multi-use containers, used for packaging pasteurized milk and milk products, shall not exceed one (1) colony per milliliter (1/mL) of capacity, when the rinse test is used, or fifty (50) colonies per fifty (50) square centimeters (one (1) colony per square centimeter) of product-contact surface, when the swab test is used, in three (3) out of four (4) samples taken at random on a given day. Coliform organisms shall be undetectable in all multi-use containers.
   b. The residual bacteria count of single-service containers and closures, used for packaging pasteurized milk and milk products, shall not exceed fifty (50) colonies per container, or in the case of dry product packaging, shall not exceed one (1) colony per milliliter (1/mL) of capacity when the rinse test is used, except that in containers less than 100 mL the count shall not exceed ten (10) colonies or fifty (50) colonies per eight (8) square inches (one (1) colony per square centimeter) of product-contact surface, when the swab test is used, in three (3) out

of four (4) samples taken at random on a given day. Coliform organisms shall be undetectable in all single-service containers.

c. When single-service containers or closures are fabricated in another plant that conforms to the Standards of Appendix J. and the Regulatory Agency has information that they do comply, the Regulatory Agency may accept the containers as being in conformance without additional testing. If there is reason to believe that containers do not conform to the bacteriological standards, additional testing may be required. If containers are fabricated in the milk plant, the Regulatory Agency shall collect, during any consecutive six (6) months, at least four (4) sample sets of containers, as defined in Appendix J., from each manufacturing line, as defined in Appendix J., in at least four (4) separate months, except when three (3) months show a month containing two (2) sampling dates separated by at least twenty (20) days, and analyze the sample sets at an Official, Commercial or Industry Laboratory, approved by the State Milk Laboratory Certifying Agency specifically for the examinations required under Appendix J.

7. Milk plants that utilize multi-use plastic containers, for pasteurized milk and milk products, shall comply with the following criteria:

a. All containers shall be identified as to plant of manufacture, date of manufacture and type and class of plastic material used. This information may be by code. Provided, that the code is revealed to the Regulatory Agency.

b. A device shall be installed in the filling line capable of detecting, in each container before it is filled, volatile organic contaminants in amounts that are of public health significance. Such device must be constructed so that it may be sealed by the Regulatory Agency to prevent the changing of its sensitivity functioning level. Models using an air injection system and with a testing device built into the detection equipment do not have to be sealed. To assure proper functioning of the system the operator needs to be able to adjust the sensitivity. However, those models utilizing an external testing device must be sealed. Any container detected by the device, as being unsatisfactory must be automatically made unusable to prevent refilling. In addition, the device must be interconnected so that the system will not operate unless the detecting device is in proper operating condition. Provided, that any other system so designed and operated that will provide equal assurance of freedom from contamination and recognized by FDA to be equally efficient may be accepted by the Regulatory Agency.

When other systems are used in place of a device for the detection of volatile organic contaminants, the following criteria has been developed to determine what constitutes equal assurance:

(1) A soaker-type washer shall be used for cleaning and sanitizing the containers and shall conform with the following criteria:

i) If caustic is used, the caustic strength for a given washing time and temperature shall be as specified in Table 2 of this Item; or

ii) If a cleaning compound, other than caustic is used, the compound shall be a mild or moderately alkaline, granular composition formulated from a blend of sodium phosphate and anionic synthetic detergents and conform to the following:

A) The used solution shall have at least a three percent (3%) concentration with a pH of at least 11.9 and an alkalinity expressed as sodium oxide of at least 2.5 percent;

B) There shall be at least a two (2) minute soak time in the soaker tank;

C) The temperature of the soaker tank shall be at least 69ºC (155ºF); and

D) The final rinse subsequent to the soaking tank shall be with a sanitizing solution.

iii) The soaker-type washer system shall be so designed and operated that unless the time, temperature and concentration, as specified for the soaker solutions, are met, the containers cannot be discharged from the washer. The mechanism for control of the time, temperature and concentration of the use solution shall be sealed.

(2) A thorough inspection procedure shall be in effect to remove any containers, which show stress cracks, splitting, pitting, discoloration, or cloudiness, as well as any unremoved soil. This must be carried out with adequate light and be much more thorough than the customary cursory inspection given to glass bottles.

c. A standard must be available for use by the Regulatory Agency for testing the proper sensitivity functioning levels of the detection device.

d. The containers shall comply with the applicable construction requirements of Item 11p of this *Ordinance*. The closure for the container shall be single-service. Screw-type closures shall not be used.

e. The container shall not impart, into the product, pesticide residual levels or other chemical contaminants in excess of those considered acceptable under the FFD&CA and regulations issued there under.

f. The phrase "Use only for food" shall appear on all containers.

8. The following requirements are for NCIMS listed milk plants choosing to use single-service glass bottles for the packaging of Grade “A” milk and/or milk products:

a. Single-service glass containers shall be manufactured from non-toxic materials and packaged and shipped in a manner that protects them from contamination, i.e., shrink-wrapped in plastic or other methods acceptable to the Regulatory Agency. All containers shall be identified (coding is acceptable) as to the plant of manufacture. Closures for the containers shall be single-service, designed to protect the pouring lip of the container and from an IMS listed fabricator.

b. These containers shall be inspected prior to filling to determine general condition, damage, and/or the presence of foreign materials, broken glass, other contaminates, etc.

c. Single-service glass containers shall be sanitized immediately prior to filling. Sanitizing solutions must be removed from the container prior to filling. Inverted draining, sterile air evacuation or other effective methods acceptable to the Regulatory Agency may accomplish this.

d. As determined by the Regulatory Agency, single-service glass containers that are received at the processing plant in an unclean and/or unprotected state, shall be properly cleaned and sanitized immediately prior to packaging. This cleaning/sanitizing operation shall be conducted in a room separate from case washing operations and rooms used for the pasteurization, processing, cooling and packaging of milk and milk products. Equipment and procedures used for the cleaning of single-service glass bottles shall meet all the requirements of this Item, including recommended sanitization efficiency tests by the Regulatory Agency.

e. Single-service glass containers must be labeled with wording to designate “single-service use only”.

ITEM 13p. STORAGE OF CLEANED CONTAINERS AND EQUIPMENT

After cleaning, all multi-use milk or milk product containers, utensils and equipment shall be transported and stored to assure complete drainage and shall be protected from contamination before use.

PUBLIC HEALTH REASON

If containers and equipment are not protected from contamination, the value of sanitization may be partly or entirely nullified.

ADMINISTRATIVE PROCEDURES

This Item is deemed to be satisfied when:

All multi-use containers, utensils and equipment, after cleaning, are transported and/or stored on racks made of impervious food grade materials, or in clean cases elevated above the floor. Containers shall be stored inverted, if practicable, on racks or in cases constructed of relatively nonabsorbent, impervious, food-grade, corrosion-resistant, non-toxic materials, or otherwise protected from contamination.

ITEM 14p. STORAGE OF SINGLE-SERVICE CONTAINERS, UTENSILS AND MATERIALS

Single-service caps, cap stock, parchment paper, containers, gaskets, liners, bags and other single-service articles for use in contact with milk and milk products shall be purchased and stored in sanitary tubes, wrappings or cartons; shall be kept therein in a clean, dry place until used; and shall be handled in a sanitary manner.

PUBLIC HEALTH REASON

Soiled or contaminated caps, parchment paper, gaskets and single-service containers nullify the benefits of the safeguards prescribed throughout this *Ordinance*. Packing the caps in tubes, which remain unbroken until they are placed in the bottling machine, is the best method of assuring cap cleanliness.

ADMINISTRATIVE PROCEDURES

This Item is deemed to be satisfied when:

1. Single-service caps, cap stock, parchment paper, containers, gaskets, liners, bags and other single-service articles for use in contact with milk and milk products are purchased and stored in sanitary tubes, wrappings or cartons; are kept in a clean, dry place until used; and are handled in a sanitary manner.
2. Paperboard shipping containers used to enclose plastic bags or unfilled containers are used only once, unless other methods are employed to protect the containers from contamination.

3. Tubes or cartons are not refilled with spilled caps, gaskets or parchment papers.
4. Cartons or boxes from which contents have been partially removed are kept closed.
5. Suitable cabinets are provided for storage of tubes after removal from the large outer box, and for storage of opened cartons, unless other satisfactory means are employed to protect the caps, closures or containers.

ITEM 15p. PROTECTION FROM CONTAMINATION

Milk plant operations, equipment and facilities shall be located and conducted to prevent any contamination of milk or milk products, ingredients, containers, utensils and equipment. All milk or milk products or ingredients that have been spilled, overflowed or leaked shall be discarded. The processing or handling of products other than Grade "A" milk or milk products in the milk plant shall be performed to preclude the contamination of such Grade "A" milk and milk products. The storage, handling and use of poisonous or toxic materials shall be performed to preclude the contamination of milk and milk products, or ingredients of such milk and milk products, or the product-contact surfaces of all containers, utensils and equipment.

PUBLIC HEALTH REASON

Because of the nature of milk and milk products and their susceptibility to contamination by bacteria, chemicals and other adulterants, every effort should be made to provide adequate protection for the milk and milk products at all times. Misuse of pesticides and other harmful chemicals can provide opportunities for contamination of the milk and milk product or equipment with which the milk or milk product comes in contact.

ADMINISTRATIVE PROCEDURES

This Item is deemed to be satisfied when:

15p.(A)

1. Equipment and operations are so located within the milk plant as to prevent overcrowding and contamination of cleaned and sanitized containers, utensils and equipment by splash, condensation or manual contact.
2. Packaged milk and milk products, which have physically left the premises or the processing milk plant are not re-pasteurized for Grade “A” use. The Regulatory Agency may, on a specific individual request, authorize reprocessing of packaged milk and milk products, provided all other aspects of this Item, including proper storage temperature and container integrity are complied with. Provided, that the re-pasteurization of milk and milk products shipped in milk tank trucks, which have been pasteurized at another Grade “A” milk plant and have been handled in a sanitary manner and maintained at 7ºC (45ºF) or less is permitted. Equipment, designated areas or rooms utilized for handling, processing and storage of returned packaged milk or milk products are maintained, operated, cleaned and sanitized so as to preclude the contamination of Grade “A” products and equipment and the Grade “A” operations.
3. All product-contact surfaces of containers, utensils and equipment are covered or otherwise protected to prevent the access of insects, dust, condensation and other contamination. All

openings, including valves and piping attached to milk and milk product storage tanks and milk tank trucks, pumps, vats, etc., shall be capped or otherwise properly protected. While unloading at a milk plant, receiving station or transfer station, one of the following conditions shall be met:

a. If the area is completely enclosed, walls and ceiling, with doors closed during the unloading process and the dust-cover or dome and the manhole cover is opened slightly and held in this position by the metal clamps used to close the cover, then a filter is not required. However, if the dust cover and/or manhole cover(s) are opened in excess of that provided by the metal clamps or the covers have been removed, then a suitable filter is required for the manhole.

b. If the area is not completely enclosed or doors of the unloading area are open during unloading, a suitable filter is required for the manhole or air inlet vent and suitable protection must be provided over the filter material either by design of the filter holding apparatus or a roof or ceiling over the area. When weather and environmental conditions permit, manhole openings and covers of milk tank trucks may be opened outdoors for the short period of time necessary for the collection of samples for animal drug residue screening. Direct connections from milk tank truck to milk tank truck must be made from valve-to-valve or through the manhole lid. Provided, that all connections are made ferrule-to-ferrule and adequate protection is provided for the air vent.

Receiving and dump vats shall be completely covered, except during washing and sanitizing, and when milk is being dumped. Where strainers are used, the cover for the vat opening shall be designed to cover the opening with the strainer in place.

4. Ingredients added to milk and milk products are handled in such a manner as to avoid contamination.

5. Whenever air under pressure is used for the agitation or movement of milk or milk products, or is directed at a milk or milk product-contact surface, it is free of oil, dust, rust, excessive moisture, extraneous materials and odor, and shall otherwise comply with the applicable standards of Appendix H. Air intakes for drying equipment shall be located so as to minimize the amount of atmospheric contamination and shall be equipped with suitable single-service filters, multi-use filters, or continuous air filter systems. (Refer to Appendix H.) The use of steam containing toxic substances is expressly prohibited. Whenever steam is used in contact with milk or milk products it shall be of culinary quality and shall comply with the applicable standards of Appendix H.

6. Air exhausts from dryer systems are covered when dryers are not in operation.

7. Standardization of Grade "A" milk and milk products with other than Grade "A" milk and milk products is prohibited. This *Ordinance* permits standardization as a process of adjusting the milk fat of milk in a milk plant by the addition or removal of cream or non-fat (skim) milk.

8. All multi-use cases used to encase packaged milk and milk product containers are cleaned prior to their use.

9. All ingredients and non-product-contact materials used in the preparation or packaging of milk and milk products are stored in a clean place and are so handled as to prevent their contamination.

10. Pasteurized milk and milk products are not strained or filtered, except through a perforated metal strainer.

11. Only those poisonous or toxic materials, including but not limited to insecticides, rodenticides, detergents, sanitizers, caustics, acids, related cleaning compounds and medicinal agents necessary for the maintenance of the milk plant are present in the milk plant.

12. Those poisonous or toxic materials that are necessary are not stored in any room where milk or milk products are received, processed, pasteurized, condensed, dried or stored; or where containers, utensils or equipment are washed; or where single-service containers, closures, bags, or caps are stored.
13. Those poisonous or toxic materials that are necessary are stored in a separate area of the milk plant in prominently and distinctly labeled containers. Provided that, this does not preclude the convenient availability of detergents or sanitizers to areas where containers, utensils and equipment are washed and sanitized.
14. Only insecticides and rodenticides approved by the Regulatory Agency and/or registered with the EPA shall be used for insect and rodent control. Such insecticides and rodenticides shall be used only in accordance with the manufacturer's label directions and shall be prevented from contaminating milk and milk products, containers, utensils and equipment.
15. In the case of separating non-Grade “A” and Grade “A” milk or milk products, a water rinse after processing non-Grade “A” and prior to Grade “A” is adequate separation, provided both are processed as Grade “A”, and raw and pasteurized milk or milk products are kept physically separated.
16. Grade "A" raw milk or milk products and non-Grade “A” raw products, dairy or non-dairy, shall be separated by one (1) valve.
17. Grade “A” pasteurized milk or milk products and non-Grade "A" pasteurized products, dairy or non-dairy, shall be separated by one (1) valve.
18. Provided, that during the actual flushing of raw milk or milk product lines and vessels with water, there shall be a sufficient separation between water piping and unpasteurized milk or milk products, or lines used to conduct unpasteurized milk or milk products, to prevent the accidental addition of water.
19. When two (2) grades of milk or milk products are received in the same milk plant in dual receiving equipment, a swing type dump grill is not permitted. When two (2) grades of milk or milk products are received in the milk plant by milk tank trucks, separate receiving equipment and unloading pumps shall be provided.

15p.(B)

1. During processing, pipelines and equipment used to contain or conduct milk and milk products shall be effectively separated from tanks or circuits containing cleaning and/or sanitizing solutions. This can be accomplished by:

a. Physically disconnecting all connection points between tanks or circuits containing cleaning and/or sanitizing solutions from pipelines and equipment used to contain or conduct milk or milk products; or

b. Separation of all connection points between such circuits by at least two (2) automatically controlled valves with a drainable opening to the atmosphere between the valves; or by a single-bodied double seat valve, with a drainable opening to the atmosphere between the seats, if:

(1) The opening to the atmosphere (vent) is equal to the largest pipeline feeding the valve(s).

(2) Both valves, and valve seats in the case of single-bodied double seat valves, are position detectable and capable of providing an electronic signal when not properly seated in the blocked position.

(3) These valves, or valve seats in the case of single-bodied double seat valves, are part of an automatic fail-safe system that will prevent contamination of product with cleaning or sanitizing solutions. Automatic fail-safe systems will be unique to each particular installation but are normally based on the premise that both blocking valve seats are properly seated in the blocked position before the mechanical cleaning system can be activated for the cleaning circuit containing this valve arrangement.
(4) The system does not have any manual overrides.
(5) Controls for the fail-safe system are secured as directed by the Regulatory Agency in order to prevent unauthorized changes.
(6) The vent is not cleaned until milk and milk products have been removed or isolated.
(7) Variations from the above specifications may be individually evaluated and found to also be acceptable if the level of protection is not compromised.

For Example: In low pressure, gravity drain applications where the product line is the same size or larger than the cleaning or sanitizing solution line, the vent may be the size of the solution line and the valves or valve seats need not be position detectable. If a common drain line is used to connect vent lines from more than one (1) block-and-bleed vent, such as in the case of drain lines from a series of cheese vats with a common drain for the block-and-bleed vent lines, the cross sectional area of the common drain line must be at least equal to the total cross sectional area of the lines connected to the header. Or, a common drain line of the same size as the vent may be used, if provisions are included in a fail-safe control system to sequence the use and cleaning of the vats to assure that no more than one (1) vat attached to that drain can be washed at the same time. All other criteria still apply. In order to accept this variation, the valve(s) must fail to the blocked position upon loss of air or power, and there must be no pumps capable of pushing milk or milk product, cleaning solutions, or sanitizing solutions into this valve arrangement.

c. In the case of aseptically processed and higher-heat-shorter-time (HHST) pasteurized milk and milk products that are processed and the equipment cleaned and/or chemically sanitized above the atmospheric boiling point of the milk or milk product or cleaning and/or sanitizing solutions, the required separation between pipe lines and equipment, used to contain or conduct milk and milk products, and tanks or circuits containing cleaning and/or chemical sanitizing solutions, may be accomplished using an alarmed steam block(s), located between the milk and milk product and cleaning and/or chemical sanitizing solutions if:
(1) The steam block is equipped with a visible steam trace that exits at the bottom of the steam block;
(2) The steam trace is equipped with a temperature sensor that is capable of differentiating between those temperatures that indicate steam exiting the steam trace has not been exposed to liquid in the steam block and temperatures that will occur when liquid is present in the steam block;
(3) This steam trace shall be physically isolated from other steam lines or traces such that the temperature sensor measures the steam temperature only from that single trace;
(4) The temperature sensor is integrated with automatic controls, such that when there is milk or milk products on one (1) side of the steam block and cleaning and/or chemical sanitizing solutions on the other side of the steam block, and the temperature sensor in the steam trace detects a temperature that indicates that liquid, rather than steam, is present in

the steam trace, the cleaning pump will be de-energized, and when needed to prevent solution pressure on the steam block, the cleaning and/or chemical sanitizing solution are automatically drained away from the steam block. Except that:

i) In systems where the cleaning and/or sanitizing solution is circulated by the timing pump, that pump may continue to operate during an alarmed condition, provided a legal flow-diversion device (FDD) is used to divert the cleaning and/or chemical sanitizing solution flow away from the steam block.

ii) In aseptic processing systems that are not equipped with a legal FDD and where the cleaning and/or sanitizing solution is circulated by the timing pump of the aseptic processing system, that pump may continue to operate during an alarmed condition, provided there are at least two (2) instrumented steam blocks between the milk and milk product and the cleaning and/or chemical sanitizing solutions and at least one (1) of the blocks remains uncompromised.

(5) During times when a steam block(s) is used as described in this Section to provide separation between pipe lines and equipment, used to contain or conduct milk and milk products, and tanks or circuits containing cleaning and/or chemical sanitizing solutions, there shall be no time delays or other means that delay an immediate automatic response to liquid exiting the steam trace; and

(6) Although the automatic control system is not required to comply with Appendix H. V., Criteria for the Evaluation of Computerized Systems for Grade "A" Public Health Controls, there shall be means provided to test and verify the accuracy of the sensor and the operation of the control system.

In order to facilitate testing, the temperature set point that will activate the automatic controls, described in this Section, will be identified for each steam block used for this purpose. Means shall be provided to verify that lowering the temperature below this set point will activate the control system when a steam block(s) is used, as described in this Section, to provide separation between pipe lines and equipment, used to contain or conduct milk and milk products, and tanks or circuits containing cleaning and/or chemical sanitizing solutions.

NOTE: The valve arrangement(s) described in this Section shall not be used to separate raw products, dairy, non-dairy or water, from pasteurized milk or milk products. Provided that, nothing in this Section shall be construed as barring any other means to separate milk and milk product from cleaning/sanitizing solution in systems, which have been recognized by FDA and in the case of aseptic processing equipment, by the Processing Authority, to be equally effective and which are approved by the Regulatory Agency.

2. Except as permitted in Item 16p, there shall be no physical connection between unpasteurized products, dairy, non-dairy, or water, and pasteurized milk or milk products. Pasteurized non-dairy products or water not completely separated from pasteurized milk and milk products, shall be pasteurized at times and temperatures which meet at least the minimum times and temperatures provided for in Definition EE or in the case of water have undergone an equivalent process found acceptable by FDA and the Regulatory Agency or has undergone a hazard evaluation and safety assessment of the specific water supply and application involved and has been treated, as necessary, following a protocol acceptable to the Regulatory Agency, in

consultation with FDA, to ensure the water will not compromise the safety of the milk or milk product[10].

This Section does not require separate raw and pasteurized mechanical cleaning systems.

3. Pasteurized re-circulation lines, divert lines, and leak-detect lines connecting to the constant-level tank shall be designed so that there is an air gap between the termination of these pipelines and the raw milk or milk product overflow level. This air gap must be equivalent to at least two (2) times the diameter of the largest of these pipelines. For purposes of this Section, an overflow is defined as the flood rim of the constant-level tank or any unrestricted opening below the flood rim of the constant-level tank which is large enough that it is at least equivalent to two (2) times the diameter of the largest of these pipelines.

4. All milk and milk products that have overflowed, leaked, been spilled or improperly handled are discarded. Milk and milk products drained from processing equipment at the end of a run, collected from a defoamer system, and milk or milk product solids rinsed from equipment, containers or pipelines shall be repasteurized only if such milk or milk products are handled in a sanitary manner and maintained at 7ºC (45ºF) or less. When the handling and/or cooling of such milk and milk products are not in compliance with this requirement, they shall be discarded. Milk and milk products from damaged, punctured or otherwise contaminated containers or product from out-of-code containers shall not be repasteurized for Grade "A" use.

5. Means are provided to prevent contamination of milk and milk products, containers, utensils and equipment by drippings, spillage and splash from overhead piping, platforms or mezzanines.

6. The processing of foods and/or drinks other than Grade "A" milk and milk products are performed to preclude the contamination of such milk and milk products.

7. No product is handled in the milk plant that may create a public health hazard. Permission to handle products other than those defined in Section 1 or to conduct operations in equipment or rooms, other than those for which they are designated, should be provisional and subject to revocation if found objectionable.

8. In no case shall pasteurized milk or milk products, be standardized with unpasteurized milk or milk products, unless the standardized milk or milk product is subsequently pasteurized.

9. Reconstituted or recombined milk and milk products shall be pasteurized after reconstitution or recombining of all ingredients.

ITEM 16p. PASTEURIZATION AND ASEPTIC PROCESSING

Pasteurization shall be performed as defined in Section 1, Definition EE of this *Ordinance*. Aseptic processing shall be performed in accordance with 21 CFR 113, 21 CFR 108 and the Administrative Procedures of Item 16p, sub-items (C), (D) and (E) of this Section. (Refer to Appendix L.)

In all cases, except for the specific exemptions provided for in ADMINISTRATIVE PROCEDURES, #3, pasteurization of raw milk or milk product shall be performed before the raw milk or milk product enters the reverse osmosis (RO), ultra-filtration (UF), evaporator or condensing equipment and shall be performed in the milk plant where the processing is done. All condensed milk and milk products transported to a milk plant for drying shall be re-pasteurized at the milk plant at which it is dried. If condensed whey containing at least forty percent (40%) total solids, has been partially crystallized by cooling, it may be transported to a separate milk plant for drying without re-pasteurization, provided the following conditions are complied with:

1. The condensed, partially crystallized whey is cooled and maintained at 7°C (45°F) or less.
2. Milk tank trucks, dedicated to hauling pasteurized product, shall be used to transport the condensed, partially crystallized whey and shall be washed and sanitized immediately prior to filling and then sealed after filling until unloading.
3. Separate unloading pumps and pipelines shall be provided and used only for the unloading of the condensed, partially crystallized whey. Such pumps and pipelines shall be cleaned and sanitized as a separate cleaning circuit.

PUBLIC HEALTH REASON

Health officials unanimously agree upon the public health value of pasteurization. Long experience conclusively shows its value in the prevention of disease that may be transmitted through milk. Pasteurization is the only practical, commercial measure, which if properly applied to all milk, will destroy all milkborne disease organisms. Examination of lactating animals and milk handlers, while desirable and of great value, can be done only at intervals and; therefore, it is possible for pathogenic bacteria to enter the milk for varying periods before the disease condition is discovered. Disease bacteria may also enter milk accidentally from other sources, such as flies, contaminated water, utensils, etc. It has been demonstrated that the time-temperature combinations specified by this *Ordinance*, if applied to every particle of milk or milk product will devitalize all milkborne pathogens. Compilations of outbreaks of milkborne disease by the USPHS/FDA, over many years, indicate that the risk of contracting disease from raw milk is approximately fifty (50) times as great as from milk that has been "pasteurized".
A note of caution is in order. Although pasteurization destroys the organisms, it does not destroy the toxins that may be formed in milk and milk products when certain staphylococci are present, as from udder infections, and when the milk or milk product is not properly refrigerated before pasteurization. Such toxins may cause severe illness. Aseptic processing has also been conclusively demonstrated to be effective in preventing outbreaks from milkborne pathogens. Numerous studies and observations clearly prove that the food value of milk is not significantly impaired by pasteurization.

ADMINISTRATIVE PROCEDURES

The pasteurization portion of this Item is deemed to be satisfied when:

1. Every particle of milk or milk product is heated in properly designed and operated equipment that meets the requirements of this Item and Appendix H., to one of the temperatures specified in the following table and held continuously at or above that temperature for at least the time specified:

Table 3. Pasteurization Temperature vs. Time	
Temperature	**Time**
63ºC (145ºF) *	30 minutes
72ºC (161ºF) *	15 seconds
89ºC (191ºF)	1.0 second
90ºC (194ºF)	0.5 seconds
94ºC (201ºF)	0.1 seconds
96ºC (204ºF)	0.05 seconds
100ºC (212ºF)	0.01 seconds

*If the fat content of the milk product is 10 percent (10%) or greater, or a total solids of 18% or greater, or if it contains added sweeteners, or is concentrated (condensed), the specified temperature shall be increased by 3ºC (5ºF).

Provided, that eggnog shall be heated to at least the following temperature and time specifications:

Temperature	Time
69ºC (155ºF)	30 minutes
80ºC (175ºF)	25 seconds
83ºC (180ºF)	15 seconds

Provided further, that nothing shall be construed as barring any other pasteurization process, which has been recognized by FDA to be equally efficient and which is approved by the Regulatory Agency.

2. All milk and milk products, i.e., milk solids, whey, nonfat dry milk, condensed milk, cream, skim milk, etc., eggs, egg products, cocoa, cocoa products, emulsifiers, stabilizers, vitamins and liquid sweeteners shall be added prior to pasteurization. Provided, ingredients which may be added after pasteurization are those flavoring ingredients and other ingredients which have been found to be safe and suitable and which include:

a. Ingredients permitted by the CFR standards of identity when considering a standardized milk or milk product;
b. Fresh fruits and vegetables added to cultured milk and milk products provided the resultant equilibrium pH level (4.6 or below when measured at 24°C (75°F)) of the finished product is reached without undue delay and is maintained during the shelf life of the product.
c. Ingredients subjected to prior heating sufficient to destroy pathogenic microorganisms;
d. Ingredients having a a_w of 0.85 or less;
e. Ingredients having a high acid content (pH level of 4.6 or below when measured at 24°C (75°F)) or high alkalinity (pH level greater than 11 when measured at 24°C (75°F));
f. Roasted nuts;
g. Dry sugars and salts;
h. Flavor extracts having a high alcohol content;
i. Safe and suitable bacterial cultures and enzymes; and
j. Ingredients, which have been found to be safe and suitable by FDA.

All such additions shall be made in a sanitary manner, which prevents the contamination of the added ingredient or the milk or milk product.

3. All milk and milk products shall be pasteurized, prior to the entrance into RO, UF, evaporator or condensing equipment, and shall be performed in the milk plant where the processing is done, except that:

a. If the product is whey, pasteurization is not required, provided:

(1) The product is acid whey (pH less than 4.7); or

(2) It is processed in RO or UF equipment at temperatures at or below 7°C (45°F).

b. If the product is raw milk for pasteurization, the product may be concentrated by the use of RO or UF membrane filtration without pasteurization, prior to entrance into the equipment, provided the following sampling, testing, design, installation and operational criteria are met:

(1) Prior to processing, all raw milk supplies are sampled and tested for antibiotic residues in accordance with the provisions of Appendix N.;

(2) The RO or UF filtration system is designed and operated to assure that milk or milk product temperature is maintained at or below 7°C (45°F) throughout the process. Provided that the product temperature may rise above 7°C (45°F) for a period of no more that fifteen (15) minutes, further provided that should the product temperature rise above 10°C (50°F), the product shall be immediately diverted until the product is again below 7°C (45°F). Diverted product shall be discarded, immediately cooled to below 7°C (45°F) or immediately pasteurized;

(3) The RO or UF system must be equipped with temperature monitoring and recording devices that comply with the applicable specifications outlined in Appendix H. of this *Ordinance*. At a minimum, milk or milk product temperature shall be monitored and recorded prior to entering the system, prior to entering each stage of the modules in series that contains cooling, and the retentate stream prior to any final cooler and upon exiting the system; and

(4) If the RO or UF system is not designed, installed and operated in accordance with the above noted criteria, the raw milk or milk product must be pasteurized prior to entering the RO or UF system.

4. All condensed milk and milk products transported to a milk plant for drying shall be re-pasteurized at the milk plant where it is dried.

5. If condensed whey containing at least forty percent (40%) total solids, has been partially crystallized by cooling, it may be transported to a separate milk plant for drying without re-pasteurization, provided the following conditions are complied with:

a. The condensed, partially crystallized whey is cooled and maintained at 7°C (45°F) or less.

b. Milk tank trucks used to transport the condensed, partially crystallized whey, shall be washed and sanitized immediately prior to filling and are sealed after filling until unloading.

c. Separate unloading pumps and pipelines shall be provided and used only for the unloading of the condensed, partially crystallized whey. Such pumps and pipelines shall be cleaned and sanitized as a separate cleaning circuit.

6. The design and operation of pasteurization equipment and all appurtenances thereto shall comply with the applicable specifications and operational procedures of Subitems (A), (B), (D) and (E).

ITEM 16p.(A) BATCH PASTEURIZATION

All indicating and recording thermometers used in connection with the batch pasteurization of milk or milk products shall comply with the applicable specifications set forth in Appendix H. Specifications for test thermometers and other test equipment appear in Appendix I.

PUBLIC HEALTH REASON

Unless the temperature-control instruments and devices used on pasteurization equipment are accurate within known limits, there can be no assurance that the proper pasteurization temperature is being applied. Pasteurization must be performed in equipment, which is properly designed and operated and which insures that every particle of milk or milk product will be held continuously at the proper temperature for the specified period of time.

Recording thermometers are the only known means for furnishing the Regulatory Agency with a record of the time and temperature of pasteurization. Experience has shown that recording thermometers, due to their mechanical complexity, are not entirely reliable. Therefore, mercury indicating thermometers or equivalent, which are much more reliable, are needed to provide a check on the recording thermometer and assurance that proper temperatures are being applied.

The recording thermometer shows the temperature of the milk or milk product immediately surrounding its bulb, but cannot indicate the temperature of the milk or milk product in other portions of the batch pasteurizer. Similarly, it shows the holding time in manual-discharge vats, but not in automatic-discharge systems. The pasteurizer must; therefore, be so designed and so operated and, where necessary, provided with such automatic controls, as to assure that every portion of the milk or milk product will be subjected to the proper temperature for the required length of time.

Unless the outlet valve and connections to the vats are properly designed and operated, cold pockets of milk or milk product may be held in the outlet valve or pipeline and raw or incompletely pasteurized milk or milk product may leak into the outlet line during the filling, heating or holding period.

Tests have shown that when foam is present on milk or milk product in vats or pockets during pasteurization, the temperature of the foam may be well below the pasteurization temperature. In such cases, pathogenic organisms that may be in the foam will not be killed. Experience indicates that some foam is present at some time in all vats, particularly at certain seasons. Furthermore, in filling vats, milk or milk product frequently is splashed on the surfaces and fixtures above the milk or milk product level, as well as on the underside of the vat cover. Droplets of this splash may drop back into the body of the milk or milk product, and since they may not have been at pasteurization temperature for the required time, they may contain pathogenic organisms. Heating the air above the milk or milk product, above pasteurization temperature, remedies these conditions. When air heating is not provided, its need may frequently be demonstrated by swabbing milk or milk product from the upper vat walls and from the underside of the cover, at the end of the holding period, and running phosphatase tests on the swab samples.

Many milk plant operators have reported that the use of airspace heaters, especially with partly filled vats with un-insulated lids, makes it easier to maintain the milk or milk product at a uniform and sufficiently high temperature. It also helps to prevent the growth of thermophilic organisms and promotes easier cleaning.

Obviously, if the design and construction of pasteurization vats and pocket covers do not prevent leakage, condensation and the entrance of water and dust, the milk or milk product may become contaminated with material containing disease bacteria. Keeping the covers closed during operation will decrease the chance of contaminants such as dust, insects, drip and splash from entering the milk or milk product.

ADMINISTRATIVE PROCEDURES

This Item is deemed to be satisfied when:

1. **TIME AND TEMPERATURE CONTROLS FOR BATCH PASTEURIZERS:**

   a. **Temperature Difference:** The pasteurizer shall be so designed that the simultaneous temperature difference between the milk or milk product, at the center of the coldest milk or milk product in the vat, will not exceed 0.5ºC (1ºF) at any time during the holding period.

   The vat shall be provided with adequate agitation, operating throughout the holding period. No batch of milk or milk product shall be pasteurized unless it covers a sufficient area of the agitator to insure adequate agitation.

   b. **Location and Required Readings of Indicating and Recording Thermometers:** Each batch pasteurizer shall be equipped with both an indicating and a recording thermometer.

   The thermometers shall not read less than the required pasteurization temperature throughout the required holding period. The milk plant operator shall check the temperature shown by the recording thermometer against the temperature shown by the indicating thermometer at the start of the holding period. This comparison shall be noted on the recording thermometer chart. The recording thermometer shall not read higher than the indicating thermometer. No batch of milk or milk product shall be pasteurized unless it is sufficient to cover the bulbs of both the indicating and the recording thermometer.

   c. **Assurance of Minimum Holding Periods:** Batch pasteurizers shall be so operated that every particle of milk or milk product will be held at not less than the minimum pasteurization temperature continuously for at least thirty (30) minutes. When milk or milk products are raised to pasteurization temperature in the vat, and cooling is begun in the vat simultaneously with or before the opening of the outlet valve, the recording chart shall show at least thirty (30) minutes, at not less than minimum pasteurization temperature. When milk or milk products are preheated to pasteurization temperature before entering the vat, the recording chart shall show a holding period of at least thirty (30) minutes, at not less than the minimum pasteurization temperature plus the time of filling from the level of the recording thermometer bulb. When cooling is begun in the batch pasteurizer, after opening the outlet valve, or is done entirely outside the batch pasteurizer, the recording chart shall show at least thirty (30) minutes at not less than the minimum pasteurization temperature plus the time of emptying to the level of the recording thermometer bulb.

   When the recording time interval on the recording chart at the pasteurization temperature includes filling and/or emptying time, such intervals shall be indicated on the recording chart, by the operator, by removing the recording thermometer bulb from the milk or milk product for a sufficient time to depress the pen; or by turning cold water into the vat jacket at the end of the holding period; or by inscribing the holding time on the recording chart. The filling time and the emptying time for each batch pasteurizer, so operated, shall be determined by the Regulatory Agency, initially and after any change, which may affect these times.

No milk or milk product shall be added to the batch pasteurizer after the start of the holding period.

2. **AIRSPACE HEATING:**

a. Means shall be provided and used in batch pasteurizers to keep the atmosphere above the milk or milk product at a temperature not less than 3ºC (5ºF) higher than the minimum required temperature of pasteurization, during the holding period. (Refer to Appendix H.)

b. Each batch pasteurizer shall be equipped with an airspace thermometer. The surface of the milk or milk product shall be at least 25 millimeters (1 inch) below the bottom of the thermometer bulb when the vat is in operation.

c. The temperature shown by the airspace thermometer shall be recorded on the recording thermometer chart at the start of the holding period and at the end of the holding period, at a given time or reference point as indicated on the recording chart.

3. **INLET AND OUTLET VALVES AND CONNECTIONS:**

The following definitions shall apply to inlet and outlet valves and connections:

a. **"Valve Stop"** shall mean a guide which permits turning the valve plug to, but not beyond, the fully closed position.

b. **"The Fully Open Position"** shall mean that position of the valve seat that permits the maximum flow into or out of the pasteurizer.

c. **"The Closed Position"** shall mean any position of the valve seat that stops the flow of milk into or out of the pasteurizer.

d. **"The Fully Closed Position"** shall mean that closed position of the valve seat which requires the maximum movement of the valve to reach the fully open position.

e. **"The Just-Closed Position"** shall mean that closed position of a plug-type valve in which the flow into or out of the holder is barely stopped, or any position within 2 millimeters (0.078 inches) thereof as measured along the maximum circumference of the valve seat.

f. **"Leakage"** shall mean the entrance of unpasteurized milk or milk product into a batch pasteurizer during the holding or emptying period, or the entrance of unpasteurized milk or milk product into any pasteurized milk or milk product line at any time.

g. **"Leak-Protector Valve"** shall mean a valve provided with a leak-diverting device, which when the valve is in any closed position, will prevent leakage of milk or milk product past the valve.

h. **"Close-Coupled Valve"** shall mean a valve, the seat of which is either flush with the inner wall of the pasteurizer or so closely coupled that no milk or milk product in the valve is more than 0.5ºC (1ºF) colder than the milk or milk product at the center of the pasteurizer at any time during the holding period.

A close-coupled valve, which is not truly flush, shall be considered as satisfying this requirement when:

(1) The vat outlet is so flared that the smallest diameter of the large end of the flare is not less than the diameter of the outlet line, plus the depth of the flare; and

(2) The greatest distance from the valve seat to the small end of the flare is not greater than the diameter of the outlet line; and

(3) In the case of batch pasteurizers, the outlet and the agitator are so placed as to insure that milk or milk product currents will be swept into the outlet.

4. **DESIGN AND INSTALLATION OF VALVES AND CONNECTIONS:**

All valves and connections shall comply with the following requirements:

a. Valves and pipeline connections shall meet the requirements of Item 10p.

b. All pipelines and fittings shall be so constructed and so located that leakage will not occur.

c. To prevent clogging, and to promote drainage, all leak-protection grooves in plug-type outlet valves shall be at least 5 millimeters (0.187 inches wide) and at least 2.3 millimeters (0.094 inches) deep at the center. Mating grooves shall provide these dimensions throughout their combined length, whenever the valve is in, or approximately in, the fully closed position. All single leak grooves, and all mating leak grooves when mated, shall extend throughout the entire depth of the seat, so as to divert leakage occurring at all points throughout the depth of the seat and so as to prevent air binding. Washers or other parts shall not obstruct leak-protector grooves.

d. A stop shall be provided on all plug-type outlet valves in order to guide the operator in closing the valve so that unpasteurized milk or milk product may not inadvertently be permitted to enter the outlet line. The stop shall be so designed that the plug will be irreversible when the plug is provided with any grooves or their equivalent, unless duplicate, diametrically opposite grooves are also provided. Stops shall be so designed that the operator cannot turn the valve beyond the stop position, either by raising the plug or by any other means.

e. Outlet valves, in addition to the requirements listed above, shall be so designed as to prevent the accumulation of unpasteurized milk or milk product in the milk or milk product passages of the valve when the valve is in any closed position.

f. All outlets from vat pasteurizers shall be equipped with close-coupled leak-protector valves or be otherwise similarly protected during filling, holding and emptying periods.

g. All leak-protector grooved outlet valves shall be installed in the proper position to insure the function of the leak-protector groves and the drainage of the leak-detector valve.

h. All outlet valves shall be kept fully closed during filling, heating, and holding periods.

i. Close-coupled vat pasteurizer outlet valve bodies and plugs shall be made of stainless steel or of other materials that have heat transfer properties at least equal to stainless steel.

j. All inlet pipelines are disconnected during the holding and emptying periods, and all outlet pipelines are disconnected during the filling and holding periods.

5. **RECORDING CHARTS:**

All recording thermometer charts shall comply with all the applicable requirements of Item 16p(E)1.a.

ITEM 16p.(B) HIGH-TEMPERATURE-SHORT-TIME (HTST) CONTINUOUS-FLOW PASTEURIZATION

PUBLIC HEALTH REASON

(Refer to the Public Health Reason under Item 16p and 16p(A))

ADMINISTRATIVE PROCEDURES

This Item is deemed to be satisfied when:

1. I**NDICATING THERMOMETERS AND RECORDER/CONTROLLER INSTRUMENTS:**

All indicating thermometers and recorder/controller instruments and devices used in connection with the HTST, continuous-flow pasteurization of milk or milk products shall comply with the applicable specifications set forth in Appendix H.

2. **AUTOMATIC MILK CONTROLLER:**

Each HTST, continuous-flow pasteurization system shall be equipped with an automatic milk-flow control of the diversion type, which complies with the following definition, specifications and performance requirements:

a. **Automatic Milk or Milk Product-Flow Controls:** The term "automatic milk or milk product-flow controls" shall mean those safety devices which control the flow of milk or milk product in relation to the temperature of the milk or milk product or heating medium and/or pressure, vacuum or other auxiliary equipment. Milk or milk product-flow controls shall not be considered as part of the temperature control equipment. Milk or milk product-flow controls shall be of the flow-diversion type, which automatically cause the diversion of the milk or milk product in response to a sub-legal pasteurization temperature. At sub-legal temperatures, FDDs return the milk or milk product to the raw milk or milk product side of the heating system continuously until legal pasteurization temperatures are obtained, at which time, the device restores forward-flow through the pasteurizer.

b. **FDDs:** All FDDs used in continuous pasteurizers shall comply with the following or equally satisfactory specifications:

(1) The forward-flow of milk or milk product below the minimum pasteurization temperature shall be prevented by requiring the motive pumps(s) to be de-energized when the milk or milk product is below the pasteurization temperature and the valve is not in the fully diverted position; or by any other equally satisfactory means.

(2) When a packing gland is used to prevent leakage around the actuating stem, it shall be impossible to tighten the stem-packing nut to such an extent as to prevent the valve from assuming the fully diverted position.

(3) A leak-escape shall be installed on the forward-flow side of the valve seat. However, when backpressure is exerted on the forward-flow side of the valve seat, while the milk or milk product-flow is being diverted, the leak-escape should lie between two valve seats or between two portions of the same seat, one upstream and the other downstream from the leak-escape. The leak-escape shall be designed and installed to discharge all leakage to the outside, or to the constant-level tank through a line separate from the diversion line. Provided, that when leakage is discharged to the constant-level tank, a sight glass shall be installed in the leak-escape line to provide a visual means of leak detection.

(4) The closure of the forward-flow seat shall be sufficiently tight so that leakage past it will not exceed the capacity of the leak-escape device, as evidenced when the forward-flow line is disconnected; and, in order that proper seating may not be disturbed, the length of the connecting rod shall not be adjustable by the user.

(5) The FDD shall be so designed and installed that failure of the primary motivating power shall automatically divert the flow of milk or milk product.

(6) The FDD shall be located downstream from the holder. The flow-control sensor shall be located in the milk or milk product line not more than 46 centimeters (18 inches) upstream from the FDD.

(7) The FDD may be located downstream from the regenerator and/or cooler section, provided, that when the FDD is located downstream from the regenerator and/or cooler section, the FDD shall be automatically prevented from assuming the forward-flow position until all product-contact surfaces between the holding tube and FDD have been held at or above the required pasteurization temperature continuously and simultaneously for at least the required pasteurization time as defined in Definition EE of this *Ordinance*.

(8) The pipeline from the diversion port of the FDD shall be self-draining and shall be free of restrictions or valves; unless such restrictions are noticeable and valves are so designed that stoppage of the diversion line cannot occur. In the case of continuous flow pasteurization systems, which have the FDD located downstream from the regenerator and/or cooler and are inter-wired or are computer controlled to thoroughly clean the system, including the divert pipeline before the re-starting of production, a cooling section, which is not self-draining, may be present in the divert pipeline.

(9) When it is used, the pipeline from the leak-detector port of the FDD shall be self-draining and shall be free of restrictions or valves.

(10) For the timing pump, a one (1) second maximum "off" time delay is allowed to maintain the flow-promoting device in the "on" position through the travel time of the FDD.

(11) If the area between the divert and leak-detect valve seats is not self-draining when the FDD is in the diverted position, a delay of at least one (1) second and not more than five (5) seconds is required between the movement of the divert and leak-detect valves when the FDD assumes the forward-flow position. Except that, the delay may be longer than five (5) seconds if: the timing system is a magnetic flow meter based timing system; or if the holding time indiverted-flow through an unrestricted divert valve line is longer than the required pasteurization time as specified in Definition EE of this *Ordinance*; and except that, no time delay is required in pasteurization systems in which the FDD is located downstream from the pasteurized regenerator and in which all forward-flow product-contact surfaces of the FDD are sanitized, or sterilized during the normal start-up process.

(12) In the case of HHST pasteurizing systems utilizing temperatures and holding times to meet the UP definition of this *Ordinance,* the FDD may be located downstream of the regenerator and/or cooler section. Said FDD may alternatively be a system of the "Steam-Block Type" as described in Appendix H. This FDD system shall allow for the flow of water and/or milk or milk product to the constant-level tank through appropriate valves and coolers during sterilization and when diverted.

c. **Milk or Milk Product-Flow Controller Instrumentation:** The following requirements shall be met with respect to the instrumentation of the milk or milk product-flow controller:

(1) The thermal-limit-controller shall be set and sealed so that forward-flow of milk or milk product cannot start unless the temperature at the controller sensor is above the required pasteurization temperature as defined in Definition EE of this *Ordinance* for the milk or milk product, and the process used, nor continue during descending temperatures when the temperature is below the required pasteurization temperature. The seal shall be applied by the Regulatory Agency after testing, and shall not be removed without immediately notifying the Regulatory Agency. The system shall be so designed that no milk or milk product can be bypassed around the controller sensor that shall not be removed from its proper position during the pasteurization process. The cut-in and cut-

out milk or milk product temperatures, as shown by the indicating thermometer, shall be determined at the beginning of each day's operation and entered upon the recorder chart daily by the milk plant operator.

(2) In the case of pasteurization systems, with the FDD located downstream from the regenerator and/or cooler section, additional temperature controllers and timers shall be inter-wired with the thermal-limit-controller, and the control system shall be set and sealed so that forward-flow of milk or milk product cannot start until all product-contact surfaces between the holding tube and FDD have been held at or above the required pasteurization temperature, continuously and simultaneously for at least the required pasteurization time as defined in Definition EE of this *Ordinance*. The control system shall also be set and sealed so that forward-flow cannot continue when the temperature of the milk or milk product in the holding tube is below the required pasteurization temperature. Provided, that for systems used for the processing of milk or milk products labeled as UP, it is not necessary to set and seal the thermal-limit-controller at or above 138ºC (280ºF). Also, provided that these systems shall meet all the public health control requirements for HHST systems, and that the recorder-controller chart shows that the UP milk or milk product has been processed at a minimum temperature of 138ºC (280ºF), and has been verified by the Regulatory Agency to have a calculated holding time of at least two (2) seconds. The seal, if required, shall be applied by the Regulatory Agency after the equipment has been tested, and shall not be removed without immediately notifying the Regulatory Agency. The system shall be so designed that no milk or milk product can be bypassed around the control sensors, which shall not be removed from their proper position during the pasteurization process. For these pasteurization systems, daily measurement by the operator of the cut-in and cut-out temperatures is not required.

(3) Manual switches for the control of pumps, homogenizers or other devices, which produce flow through the holder, shall be wired so that the circuit is completed only when milk or milk product is above the required pasteurization temperature as defined in Definition EE of this *Ordinance* for the milk or milk product and the process used, or when the FDD is in the fully-diverted position.

d. **Holding Tube:**

(1) Holding tubes shall be designed to provide for the holding of every particle of the milk or milk product for at least the time required in Definition EE of this *Ordinance* for the milk or milk product and the process used.

(2) The holding tube shall be so designed that the simultaneous temperature difference between the hottest and coldest milk or milk product, in any cross section of flow, at any time during the holding period, will not be greater than 0.5ºC (1ºF). This requirement may be assumed to have been satisfied, without testing, in tubular holders of 17.8 centimeters (7 inches) or smaller diameter that are free of any fittings through which the milk or milk product may not be thoroughly swept.

(3) No device shall be permitted for short-circuiting a portion of the holding tube to compensate for changes in rate of milk or milk product-flow. Holding tubes shall be installed so that sections of pipe cannot be left out, resulting in a shortened holding time.

(4) The holding tube shall be arranged to have a continuously upward slope in the direction of flow of not less than 2.1 centimeters per meter (0.25 inches per foot).

(5) Supports for holding tubes shall be provided to maintain all parts of the holding tubes in a fixed position, free from any lateral or vertical movement.

(6) The holding tube shall be so designed that no portion between the inlet and the recorder-controller temperature sensor is heated.

The following Items apply to HHST systems:

(7) The holding time for HHST systems must be determined from the pumping rate rather than by the salt conductivity test, because of the short holding tube. The holding tube length must be such that the fastest flowing particle, of any milk or milk product, will not traverse the holding tube in less than the required holding time. Since laminar flow, the fastest flowing particle travels twice as fast as the average flowing particle, can occur in the holding tube during pasteurization of high-viscosity milk or milk products, holding tube lengths are calculated as twice the length required to hold the average flow for the time standard.

(8) With the direct steam heating processes, the holding time is reduced because the milk or milk product volume increases as the steam condenses to water during heating in the injector. This surplus water is evaporated as the pasteurized milk or milk product is cooled in the vacuum chamber. For example, with a 66ºC (120ºF) increase by steam injection, which is probably the maximum temperature rise that will be used, a volume increase of twelve percent (12%) will occur in the holding tube. The measurement of the average flow rate, at the discharge of the pasteurizer, does not reflect this volume increase in the holding tube. However, this volume increase, i.e., holding time decrease, must be considered in the calculations.

(9) For those HHST systems capable of operating with less that 518 kPa (75 psig) pressure in the holding tube, a pressure limit indicator/pressure switch must be interwired so that the FDD will move to the divert position if the milk or milk product pressure falls below a prescribed value. For operating temperatures between 89°C (191ºF) and 100ºC (212ºF) the instrument must be set at 69 kPa (10 psi). To prevent vaporization in the holding tube, which may substantially reduce residence times, HHST systems operating above 100°C (212ºF), the instrument must be set at 69 kPa (10 psi) above the boiling pressure of the product, at its maximum temperature in the holding tube.

(10) With the steam injection process, a differential pressure limit indicator across the injector is needed to keep the heated milk or milk product in the liquid phase and to ensure adequate isolation of the injection chamber. The instrument must have a differential pressure switch so that the FDD will move to the divert position if the pressure drop across the injector falls below 69 kPa (10 psi).

e. **Indicating and Recording Thermometers:**

(1) An indicating thermometer shall be located as near as practicable to the temperature sensor of the recorder/controller, but may be located a short distance upstream from the latter where milk or milk product between the two thermometers does not differ significantly in temperature.

(2) The temperature shown by the recorder/controller shall be checked daily by the milk plant operator against the temperature shown by the indicating thermometer. Readings shall be recorded on the chart. The recorder/controller shall be adjusted to read no higher than the indicating thermometer.

(3) The recorder/controller charts shall comply with the applicable provisions of Item 16p(E)1.a.

f. **Flow-Promoting Devices:**

(1) The pump or pumps and other equipment which may produce flow through the holding tube shall be located upstream from the holding tube, provided that pumps and other flow-promoting devices may be located downstream from the holding tube, if means are provided to eliminate negative pressure between the holding tube and the inlet to such equipment. When vacuum equipment is located downstream from the holding tube, an effective vacuum breaker, plus an automatic means of preventing a negative pressure in the line between the FDD and the vacuum chamber, shall be acceptable.

(2) The speed of pumps or other flow-promoting devices, governing the rate of flow through the holding tube, shall be so controlled as to insure the holding of every particle of milk or milk product for at least the time required as defined in Definition EE of this *Ordinance* for the milk or milk product and the process used. In all cases, the motor shall be connected to the timing pump by means of a common drive shaft, or by means of gears, pulleys, or a variable-speed drive, with the gear box, the pulley box or the setting of the variable speed protected in such a manner that the holding time cannot be shortened without detection by the Regulatory Agency. This shall be accomplished by the application of a suitable seal(s) after being tested by the Regulatory Agency and such seal(s) shall not be broken without immediately notifying the Regulatory Agency. This provision shall also apply to all homogenizers used as timing pumps. Variable speed drives, used in connection with the timing pump, shall be so constructed that wearing or stretching of the belt results in a slowdown, rather than a speedup, of the pump.

The metering or timing pump shall be of the positive-displacement type or shall comply with the specifications for magnetic flow meter based timing systems as outlined in Appendix H. Timing pumps and homogenizers, when used as a timing pump, shall not have by-pass lines connected from their outlet pipelines to their inlet pipelines during processing if an additional flow-promoting or vacuum producing device is located within the system. When a homogenizer is used in conjunction with a timing pump it shall be either:

i) Of larger capacity than the timing pump: In which case, an unrestricted, open, recirculation line shall be used to connect the outlet pipeline from the homogenizer to its inlet line. The recirculation line must be of at least the same or larger diameter than the inlet pipeline feeding milk or milk product to the homogenizer. A check-valve, allowing flow from the outlet line to the inlet line, may be used in the recirculating line, provided it is of the type which provides a cross-sectional area at least as large as the recirculating line.

ii) Of smaller capacity than the timing pump: In which case, a relief line and valve shall be used. Such relief line shall be located after the timing pump and before the inlet to the homogenizer and shall return milk or milk product to the constant-level tank or to the outlet of the constant-level tank, upstream of any booster pump or other flow-promoting device.

For those systems that do not homogenize all milk or milk products and wish to utilize a by-pass line to by-pass the homogenizer while processing such milk or milk product, the by-pass line must be connected with valves that are so designed that both lines cannot be open at the same time. This may be accomplished with three (3)-way plug valves with properly designed and operating pins or other automatic, fail-safe valves that accomplish the same objective.

(3) The holding time shall be taken to mean the flow time of the fastest particle of milk or milk product at or above the required pasteurization temperature as defined in Definition EE of this *Ordinance* for the milk or milk product and the process used, throughout the holding tube section; i.e., that portion of the system that is outside of the influence of the heating medium, slopes continuously upward in the downstream direction and is located upstream from the FDD. Tests for the holding time shall be made when all equipment and devices are operated and adjusted to provide for maximum flow. When a homogenizer is located upstream from the holding tube, the holding time shall be determined with the homogenizer in operation with no pressure on the homogenizer valves.

For those systems which do not homogenize all milk or milk products and utilize by-pass lines as outlined in f.(2) i) above, the holding time shall be tested in both flow patterns and the fastest time used. The holding time shall be tested during both forward and diverted-flow. If it is necessary to lengthen the holding time during diverted-flow, an identifiable restriction may be placed in the vertical portion of the diversion pipeline. When vacuum equipment is located downstream from the holding tube, the holding time shall be tested with the timing pump operating at maximum flow and the vacuum equipment adjusted to provide for the maximum vacuum. The holding time shall be tested in both forward and diverted-flow by the Regulatory Agency initially; semiannually thereafter; after any alteration or replacement that may affect the holding time; and whenever the seal of the speed setting has been broken.

g. **Heating by Direct Addition of Steam:** Steam injection is an inherently unstable process; accordingly, when steam is injected into a fluid, condensation of the steam may not be completed inside the injector unless the proper design criteria are used. Lack of complete condensation inside the injector would cause temperature variations in the holding tube that could lead to some milk or milk product particles being processed below pasteurization temperature. When culinary steam is injected directly into milk or milk product, as the means of terminal heating to achieve pasteurization temperature, the steam injector shall be designed, installed and operated to comply with the following or equally satisfactory specifications:

(1) The milk or milk product and steam flows must be isolated from pressure fluctuations inside the injection chamber. One (1) method of isolation is to insert supplementary orifices on the milk or milk product inlet and the heated milk or milk product outlet of each injector. The two (2) supplementary orifices must be sized for at least a 69 kPa (10 psi) milk or milk product pressure drop across the injector during a simulation of normal operations. Excessive vibrations, pressure fluctuations or erratic noise levels indicate an unstable steam injection system and a need to check the isolation of the injection chamber.

(2) The process should be as free as possible of non-condensable gases that may evolve from the product or be carried in the steam supply. Any two-phase flow caused by the non-condensable gases would displace the product in the holding tube, resulting in reduced residence times. In addition, these gases in the steam supply may also markedly alter the condensation mechanism at the point of injection. Accordingly, the steam boiler shall be supplied with a de-aerator. The de-aerator will aid in keeping the product in the holding tube as free as possible of non-condensable gases.

h. **Prevention of Milk or Milk Product Adulteration with Added Water:**
(1) When culinary steam is introduced directly into the milk or milk product, downstream from the FDD, means shall be provided to preclude the addition of steam to the milk or milk product, unless the FDD is in the forward-flow position. This provision may be satisfied by the use of an automatic steam control valve with a temperature sensor located downstream from the steam inlet, or by the use of an automatic solenoid valve installed in the steam line and so wired through the FDD controls, so that steam cannot flow unless the FDD is in the forward-flow position.
(2) When culinary steam is introduced directly into the milk or milk product, automatic means, i.e., stand-alone and/or PLC-based ratio control system, shall be provided to maintain a proper temperature differential between incoming and outgoing milk or milk product to preclude dilution with water.
(3) Where a water feed line is connected to a vacuum condenser and the vacuum condenser is not separated from the vacuum chamber by a physical barrier, means shall be provided to preclude the backup and overflow of water from the vacuum condenser to the vacuum chamber. This provision may be satisfied by the use of a safety shutoff valve, located on the water feed line to the vacuum condenser, which is automatically actuated by a control, which will shut off the in-flowing water, if for example, the condensate pump stops and the water level rises above a predetermined point in the vacuum condenser. This valve may be actuated by water, air or electricity and shall be so designed that failure of the primary motivating power will automatically stop the flow of water into the vacuum condenser.

ITEM 16p.(C) ASEPTIC PROCESSING SYSTEMS

PUBLIC HEALTH REASON

Aseptically processed milk and milk products are being packaged in hermetically sealed containers and stored for long periods of time under non-refrigerated conditions. These conditions are favorable to the growth of many types of bacteria, including pathogenic, toxin producing and spoilage organisms. Because of this, every precaution must be taken to ensure that the chosen heat process, for the particular milk or milk product, destroys all viable organisms and their spores. The subsequent handling, packaging and storage processes do not provide an opportunity for recontamination of the milk or milk product. The selected process must conform to the acceptable requirements for low acid canned foods.

ADMINISTRATIVE PROCEDURES

This Item is deemed to be satisfied when:

The design and operation of aseptic processing systems comply with the applicable specifications and operational procedures of Item 16p, sub-items (C), (D) and (E). Provided, that nothing shall be construed as barring any other aseptic processing system which have been recognized by FDA to be equally effective and which is approved by the Regulatory Agency.

1. **INDICATING THERMOMETERS AND RECORDER/CONTROLLER INSTRUMENTS:**

All indicating thermometers, recorder/controller instruments and devices, used in connection with aseptic processing systems, used for the aseptic processing of milk or milk products shall comply with the applicable specifications set forth in Appendix H.

2. **ASEPTIC PROCESSING EQUIPMENT:**

a. **Temperature Indicating Device:** Each aseptic processing system shall be equipped with at least one (1) mercury-in-glass thermometer or an equivalent temperature-indicating device.

b. **Temperature Recorder/Controller:** An accurate temperature recorder/controller shall be installed in the milk or milk product at the holding tube outlet and before the inlet to the cooler or regenerator. The following requirements shall be met with respect to the instrumentation of the temperature recorder/controller:

(1) The temperature recorder/controller shall be set and sealed so that during milk or milk product processing the forward-flow of milk or milk product cannot start unless the temperature at the controller sensor is above the required temperature for the milk or milk product and the process used, nor continue during descending temperatures when the temperature is below the required temperature.

The seal shall be applied by the Regulatory Agency after testing and shall not be removed without immediately notifying the Regulatory Agency. The system shall be so designed that no milk or milk product can be bypassed around the controller sensor, which shall not be removed from its proper position during the processing of aseptic milk and milk products.

(2) Additional temperature-controllers and timers shall be interwired with the thermal-limit controller, and the control system shall be set and sealed so that forward-flow of milk or milk product cannot start until all product-contact surfaces between the holding tube and FDD have been held at or above the required sterilization temperature, continuously and simultaneously for at least the required sterilization time. The control system shall also be set and sealed so that forward-flow cannot continue when the temperature of the milk or milk product in the holding tube is below the required temperature. The seal shall be applied by the Regulatory Agency after being tested and shall not be removed without immediately notifying the Regulatory Agency. The system shall be so designed that no milk or milk product can be bypassed around the control sensors, which shall not be removed from their proper position during the processing of aseptic milk and milk products.

(3) Manual switches for the control of pumps, homogenizers or other devices that produce flow through the holding tube, shall be wired so that the circuit is completed only when the milk or milk product is above the required temperature for the milk or milk product and the process used, or when the FDD is in the fully diverted position.

c. **Timing Pump:**

(1) A timing pump shall be located upstream from the holding tube and shall be operated to maintain the required rate of milk or milk product flow. The motor shall be connected to the timing pump by means of a common drive shaft, or by means of gears, pulleys or a variable-speed drive, with the gear box, the pulley box or the setting of the variable speed protected in such a manner that the hold time cannot be shortened without detection by the Regulatory Agency. This shall be accomplished by the application of a suitable seal(s) after being tested by the Regulatory Agency and such seal(s) shall not be broken

without immediately notifying the Regulatory Agency. This provision shall apply to all homogenizers used as timing pumps. Variable speed drives, used in connection with the timing pump, shall be so constructed that wearing or stretching of the belt results in a slowdown, rather than a speedup, of the pump. The metering or timing pump shall be of the positive-displacement type or shall comply with the specifications for magnetic flow meter based timing systems.

(2) The holding time shall be taken to mean the flow time of the fastest particle of milk or milk product throughout the holding tube section, i.e., that portion of the system that is outside of the influence of the heating medium; and slopes continuously upward in the downstream direction; and is located upstream from the FDD.

d. **Milk or Milk Product Holding Tube:**

(1) The milk or milk product holding tube shall be designed to give continuous holding of every particle of milk or milk product for at least the minimum holding time specified in the scheduled process. The holding tube shall be designed, so that no portion of the holding tube between the milk or milk product inlet and the milk or milk product outlet can be heated. In addition, it must be sloped upward at least 2.1 centimeters per meter (0.25 inches per foot). Supports for holding tubes shall be provided to maintain all parts of the holding tubes in a fixed position, free from any lateral or vertical movement.

(2) No device shall be permitted for short-circuiting a portion of the holding tube to compensate for changes in rate of milk or milk product flow. Holding tubes shall be installed so that sections of pipe cannot be left out, resulting in a shortened holding time. The holding time for the processes must be determined from the pumping rate, rather than by the salt conductivity test.

(3) The holding tube length must be such that the fastest flowing particle of any milk or milk product will not traverse the holding tube in less than the required holding time.

NOTE: With the direct addition of steam, the holding time is reduced because the milk or milk product volume increases as the steam condenses to water during heating. This surplus water is evaporated as the aseptically processed milk or milk product is cooled in the vacuum chamber. For example, with a 66ºC (120ºF) increase by steam injection, which is probably the maximum temperature rise that will be used, a volume increase of twelve percent (12%) will occur in the holding tube. The measurement of the average flow rate at the discharge of the aseptic processor does not reflect this volume increase in the holding tube. However, this volume increase, i.e., holding time decrease, must be considered in the calculations.

(4) An aseptic processing system which can operate with milk or milk product in forward-flow mode, with less than 518 kPa (75 psig) pressure in the holding tube shall be equipped with a pressure limit indicator/pressure switch in the holding tube to assure that the heated milk or milk product remains in the liquid phase. In systems that do not have a vacuum chamber between the holding tube and the aseptic milk or milk product side of the regenerator, this can be established by verifying that the aseptic processing equipment cannot operate in forward-flow with less than 518 kPa (75 psig) pressure on the aseptically processed side of the regenerator. (Refer to Appendix I., Test 9). The pressure limit indicator/pressure switch must be interwired so that the FDD, milk or milk product divert system, milk or milk product divert valve or other acceptable control system will move to the divert position, if the milk or milk product pressure falls below a prescribed

value. The instrument must be set at a pressure 69 kPa (10 psi) above the boiling pressure of the milk or milk product at its maximum temperature in the holding tube. If this pressure is too low, the resultant vaporization in the holding tube will substantially reduce residence times.

(5) With the steam injection process, a differential pressure limit indicator, across the injector, is needed to ensure adequate isolation of the injection chamber. The instrument must have a differential pressure switch so that the FDD will move to the divert position if the pressure drop across the injector falls below 69 kPa (10 psi).

e. **Heating by Direct Addition of Steam:** Steam injection is an inherently unstable process; accordingly, when steam is injected into a fluid, condensation of the steam may not be completed inside the injector unless the proper design criteria are used. Lack of complete condensation inside the injector would cause temperature variations in the holding tube, which could lead to some milk or milk product particles being processed below filed process temperature. When culinary steam is injected directly into milk or milk products, as the means of terminal heating to achieve aseptic processing temperature, the steam injector shall be designed, installed and operated to comply with the following or equally satisfactory specifications:

(1) The milk or milk product and steam flows must be isolated from pressure fluctuations inside the injection chamber. One (1) method of isolation is to insert supplementary orifices on the milk or milk product inlet and the heated milk or milk product outlet of each injector. The two (2) supplementary orifices must be sized for at least a 69 kPa (10 psi) milk or milk product pressure drop across the injector during a simulation of normal operations. Excessive vibrations, pressure fluctuations or erratic noise levels indicate an unstable steam injection system and a need to check the isolation of the injection chamber.

(2) The process should be as free as possible of non-condensable gases that may evolve from the milk or milk product or be carried in the steam supply. Any two (2) phase flow, caused by the non-condensable gases, would displace the milk or milk product in the holding tube, resulting in reduced residence times. In addition, these gases in the steam supply may also markedly alter the condensation mechanism at the point of injection. Accordingly, the steam boiler shall be supplied with a de-aerator. The de-aerator will aid in keeping the milk or milk product in the holding tube as free as possible of non-condensable gases.

f. **Prevention of Milk or Milk Product Adulteration with Added Water:**

(1) When culinary steam is introduced directly into the milk or milk product, automatic means, i.e., stand-alone and/or PLC-based ratio control system, shall be provided to maintain a proper temperature differential between incoming and outgoing milk or milk products to preclude dilution with water.

(2) Where a water feed line is connected to a vacuum condenser and the vacuum condenser is not separated from the vacuum chamber by a physical barrier, means shall be provided to preclude the back-up and overflow of water from the vacuum condenser into the vacuum chamber. This provision may be satisfied by the use of a safety shutoff valve, located on the water feed line to the vacuum condenser that is automatically actuated by a control that shuts off the in-flowing water. This valve may be actuated by water, air or electricity and shall be so designed that failure of the primary motivating power will automatically stop the flow of water into the vacuum condenser.

g. **FDD:** All FDDs used in continuous aseptic process systems shall comply with Item 16p(B)2.b. or equally satisfactory specifications.

ITEM 16p.(D) PASTEURIZERS AND ASEPTIC PROCESSING SYSTEMS EMPLOYING REGENERATIVE HEATING

PUBLIC HEALTH REASON

To prevent contamination of the pasteurized milk or milk product in regenerators, the raw milk or milk product must always be under less pressure than the pasteurized milk or milk product or the heat-transfer medium. In the case of milk or milk-to-milk or milk regenerators, this requirement is necessary to prevent contamination of the pasteurized milk or milk product by the raw milk or milk product if flaws should develop in the metal or joints separating the raw and pasteurized milk or milk product.

ADMINISTRATIVE PROCEDURES

This Item is deemed satisfied when:

MILK OR MILK PRODUCT-TO-MILK OR MILK PRODUCT REGENERATIVE HEATING

Pasteurizers and aseptic processing systems employing milk or milk product-to-milk or milk product regenerative heating with both sides closed to the atmosphere shall comply with the following or equally satisfactory specifications:

1. Regenerators shall be constructed, installed and operated so that pasteurized or aseptic milk or milk product in the regenerator will automatically be under greater pressure than raw milk or milk product in the regenerator at all times.
2. The pasteurized or aseptic milk or milk product, between its outlet from the regenerator and the nearest point downstream open to the atmosphere, shall rise to a vertical elevation of 30.5 centimeters (12 inches) above the highest raw milk or milk product level, downstream from the constant-level tank, and shall be open to the atmosphere at this or a higher elevation.
3. The overflow of the top rim of the constant-level tank shall always be lower than the lowest milk or milk product level in the regenerator.
4. No pump or flow-promoting device which can affect the proper pressure relationships within the regenerator shall be located between the pasteurized or aseptic milk or milk product outlet from the regenerator and the nearest downstream point open to the atmosphere.
5. No pump shall be located between the raw milk or milk product inlet to the regenerator and the constant-level tank, unless it is designed and installed to operate only when milk or milk product is flowing through the pasteurized or aseptic milk or milk product side of the regenerator and when the pressure of the pasteurized or aseptic milk or milk product is higher than the maximum pressure produced by the pump. This may be accomplished by wiring the booster pump so that it cannot operate unless:
   a. The timing pump is in operation;
   b. The FDD is in forward-flow position; and

c. The pasteurized or aseptic milk or milk product pressure exceeds, by at least 6.9 kPa (1 psi), the maximum pressure developed by the booster pump. Pressure gauges shall be installed at the raw milk or milk product inlet to the regenerator and the pasteurized or aseptic milk or milk product outlet of the regenerator or the outlet of the cooler. The accuracy of these required pressure gauges shall be checked, by the Regulatory Agency, on installation; quarterly thereafter; and following repair or adjustment.

6. The motor, casing and impeller of the booster pump shall be identified for those systems that rely on a pressure switch, located only on the pasteurized side, and such records maintained as directed by the Regulatory Agency.

7. All electric wiring interconnections for the booster pump should be in permanent conduit, except that rubber covered cable may be used for final connections, with no electrical connections to defeat the purpose of any provisions of this *Ordinance*.

8. All raw milk or milk product in the regenerator(s) will automatically drain freely into the constant-level tank or to the floor when the raw milk or milk product pump(s) are shut down and the raw milk or milk product connection(s) at the regenerator(s) is disconnected.

9. When vacuum equipment is located downstream from the FDD, means shall be provided to prevent the lowering of the pasteurized or aseptic milk or milk product level in the regenerator during periods of diverted-flow or shutdown. An effective vacuum breaker, plus an automatic means of preventing a negative pressure, shall be installed in the line between the vacuum chamber and the pasteurized or aseptic milk or milk product inlet to the regenerator.

10. In the case of pasteurization systems, with the FDD located downstream from the regenerator and/or cooler section, the requirements of paragraphs (2), (3), (5), (7) and (8) of this Section may be eliminated. Provided, that a differential pressure controller is used to monitor the highest pressure in the raw milk or milk product side of the regenerator and the lowest pressure in the pasteurized side of the regenerator, and the controller is interlocked with the FDD and is set and sealed so that whenever improper pressures occur in the regenerator, forward-flow of milk or milk product is automatically prevented and will not start again until all milk or milk product-contact surfaces between the holding tube and FDD have been held at or above the required pasteurization temperature, continuously and simultaneously for at least the required pasteurization time as defined in Definition EE of this *Ordinance*.

In the case of aseptic processing systems used for producing aseptic milk and milk products, there shall be an accurate differential pressure recorder-controller installed on the regenerator. The scale divisions shall not exceed 13.8 kPa (2 psi) on the working scale of not more than 138 kPa (20 psi) per 2.54 centimeters (1 inch). The controller shall be tested for accuracy against a known accurate standard pressure indicator upon installation; at least once every three (3) months of operation thereafter; or more frequently if necessary, to ensure its accuracy. One (1) pressure sensor shall be installed at the aseptic milk or milk product regenerator outlet and the other pressure sensor shall be installed at the raw milk or milk product regenerator inlet.

11. When culinary steam is introduced directly into milk or milk product to achieve pasteurization or aseptic processing temperature, and vacuum equipment is located downstream from the holding tube, the requirement that a vacuum breaker be installed at the inlet to the pasteurized or aseptic side of the regenerator may be eliminated. Provided, that the differential pressure controller is installed and wired to control the FDD as described in paragraph 10 of this Section.

12. When the differential pressure controller is installed and wired to control the FDD as described in paragraph 10 of this Section, the raw milk or milk product booster pump may be permitted to run at all times. Provided, that the timing pump is in operation.

MILK OR MILK PRODUCT-TO-WATER-TO-MILK OR MILK PRODUCT REGENERATIVE HEATING

Option 1. Milk or milk product-to-water-to-milk or milk product regenerators, with both the milk or milk product and the heat-transfer water in the raw milk or milk product section, closed to the atmosphere, shall comply with the following or equally satisfactory specifications:

a. Regenerators of this type shall be so designed, installed and operated that the heat-transfer-medium side of the regenerator, in the raw milk or milk product section, will automatically be under greater pressure than the raw milk or milk product side at all times.

b. The heat-transfer water shall be a safe water and the heat-transfer water shall be in a covered tank, which is open to the atmosphere at an elevation higher, by at least 30.5 centimeters (12 inches), than any raw milk or milk product level downstream from the constant-level tank. The heat-transfer water between its outlet from the regenerator and the nearest point downstream open to the atmosphere shall rise to a vertical elevation of at least 30.5 centimeters (12 inches) above any raw milk or milk product in the system and shall be open to the atmosphere at this or a higher elevation.

c. The heat-transfer water circuit shall be full of water at the beginning of the run and all loss of water from the circuit shall be automatically and immediately replenished whenever raw milk or milk product is present in the regenerator.

d. The overflow of the top rim of the constant-level tank shall always be lower than the lowest milk or milk product level in the raw milk or milk product section of the regenerator. The regenerator shall be designed and installed so that all raw milk or milk product shall drain freely back to the upstream supply tank when the raw milk or milk product pumps are shut down and the raw milk or milk product line is disconnected from the regenerator outlet.

e. No pump shall be located between the raw milk or milk product inlet to the regenerator and the constant-level tank, unless it is designed and installed to operate only when water is flowing through the heat-transfer section of the regenerator and when the pressure of the heat-transfer water is higher than the pressure of the raw milk or milk product. This may be accomplished by wiring the booster pump so that it cannot operate unless:

(1) The heat-transfer water pump is in operation; and

(2) The heat-transfer water pressure exceeds, by at least 6.9 kPa (1 psi), the raw milk or milk product pressure in the regenerator. A differential pressure-controller shall be installed at the raw milk or milk product inlet and the heat-transfer water outlet of the regenerator. The raw milk or milk product booster pump must be wired so that it cannot operate unless the differential pressure is met. The accuracy of the required differential pressure-controller shall be checked by the Regulatory Agency on installation; quarterly thereafter; and following repair or replacement.

Option 2. Milk or milk product-to-water-to-milk or milk product regenerators may also be constructed, installed and operated such that the pasteurized or aseptic milk or milk product in

the regenerator will be under greater pressure than the heat-transfer-medium in the pasteurized or aseptic milk or milk product side of the regenerator:

a. A differential pressure controller shall be used to monitor pressures of the pasteurized milk or milk product and the heat-transfer-medium.
b. In the case of aseptic processing systems, a differential pressure-recorder shall be used to monitor pressures of the aseptic milk or milk product and the heat-transfer-medium.
c. In either case, one pressure sensor shall be installed at the pasteurized or aseptic milk or milk product outlet of the regenerator and the other pressure sensor shall be installed at the heat-transfer-medium inlet of the pasteurized or aseptic milk or milk product side of the regenerator. This controller or recorder-controller shall divert the FDD whenever the lowest pressure of pasteurized or aseptic milk or milk product in the regenerator fails to exceed the highest pressure of the heat-transfer-medium in the pasteurized or aseptic milk or milk product side of the regenerator by at least 6.9 kPa (1 psi). Forward-flow of milk or milk product shall be automatically prevented until all milk or milk product-contact surfaces between the holding tube and the FDD have been held at or above the required pasteurization or sterilization temperature continuously and simultaneously for at least the pasteurization or sterilization time.
d. The heat-transfer-medium pump shall be wired so that it cannot operate unless the timing pump is in operation.

NOTE: Refer to Appendix H. for further discussion concerning methods of achieving the required pressure relationships within the regenerator.

ITEM 16p.(E) PASTEURIZATION AND ASEPTIC PROCESSING RECORDS, EQUIPMENT TESTS AND EXAMINATIONS

1. PASTEURIZATION AND ASEPTIC PROCESSING RECORDS:

All temperature and flow rate pasteurization recording charts or alternative records, acceptable to FDA, in place of charts shall be preserved for a period of three (3) months. Provided, that all records and recording charts for aseptic milk and milk product systems shall be retained for a period of three (3) years. The use of such charts shall not exceed the time limit for which they are designed. Overlapping of recorded data shall be a violation of this Item. The following information shall be entered on the charts or other records acceptable to FDA in place of charts as applicable:

a. **Batch Pasteurizers**:

(1) Date;
(2) Number or location of recording thermometer when more than one is used;
(3) A continuous record of the product temperature;
(4) Extent of holding period, including filling and emptying times when required;
(5) Reading of airspace thermometer, at the start of the holding period and at the end of the holding period, at a given time or reference point as indicated on the chart;
(6) Reading of indicating thermometer, at the start of the holding period, at a given time or reference point as indicated on the chart;

(7) Quarterly, the time accuracy of the recording thermometer, as determined by the Regulatory Agency, or in the case of milk plants regulated under the NCIMS HACCP Program, a qualified industry person acceptable to the Regulatory Agency;
(8) Amount and name of the pasteurized milk or milk product, represented by each batch or run on the chart;
(9) Record of unusual occurrences;
(10) Signature or initials of the operator; and
(11) Name of the milk plant.

b. **HTST and HHST Pasteurizers:** Recording thermometer charts shall contain all the information specified in Subitem a. above, except (4), and (5), and in addition, shall include the following:

(1) A record of the time during which the FDD is in the forward-flow position;
(2) The cut-in and cut-out milk or milk product temperatures, recorded daily by the operator, at the beginning of the run (HTST only), and initialed quarterly by the Regulatory Agency, or in the case of milk plants regulated under the NCIMS HACCP Program, a qualified industry person acceptable to the Regulatory Agency; and
(3) Number (6) from above shall also be recorded immediately after a chart has been changed.

NOTE: The temperature shown on the recording thermometer chart shall be used to determine that the required temperature for milk or milk products containing higher fat and/or sweeteners has been achieved.

c. **Continuous-Flow Pasteurizers or Aseptic Processing Equipment with Magnetic Flow Meter Based Timing Systems:** Flow rate recording charts shall be capable of continuously recording flow at the flow alarm set point and at least 19 liters (5 gallons) per minute higher than the high flow alarm setting. Flow rate recording charts shall contain all the information specified in Subitem a. above, except (3), (4), (5), and (6), and in addition, shall include the following:
(1) A continuous record of the status of the high and low-flow/loss of signal alarms; and
(2) A continuous record of the flow rate.

d. **Aseptic Processing Systems:** Recording thermometer charts shall contain all the information specified in Subitem a. above, except (4) and (5). In addition these records shall include Subitem c. above, if applicable, and the following:
(1) A continuous record of the time during which the FDD, valve or system is in the forward-flow position;
(2) A continuous record of applicable regenerator pressures;
(3) Not later than one (1) working day after the actual process, and before shipment or release for distribution, a representative of the milk plant management, who is qualified by suitable training or experience, shall review all processing and production records for completeness and to ensure that the milk or milk product received the schedule process. The records, including the recording thermometer chart(s), shall be signed or initialed and dated by the reviewer; and

(4) Number (6) from above shall also be recorded immediately after a chart has been changed.

2. **EQUIPMENT TESTS AND EXAMINATIONS:**

The Regulatory Agency shall perform the indicated tests on the following instruments and devices initially on installation; and at least once each three (3) months, including the remaining days of the month in which the equipment tests are due; and whenever any alteration or replacement is made which may affect the proper operation of the instrument or device. Provided, that the holding time test shall be conducted at least every six (6) months, including the remaining days of the month in which the equipment check is due.

On an emergency basis, pasteurization equipment may be tested and temporarily sealed by a milk plant employee provided the following conditions are met:

a. The individual applying the seal(s) is employed by the milk plant in which the seal was removed;

b. The individual has satisfactorily completed training, acceptable to the Regulatory Agency, on test controls for pasteurization equipment;

c. The individual has demonstrated the ability to satisfactorily conduct all pasteurization control tests, in the presence of a regulatory official, within the past year;

d. The individual is in possession of authorization from the Regulatory Agency to perform these tests;

e. The individual will immediately notify the Regulatory Agency of the time of the shutdown that would necessitate the removal of the regulatory seal(s). Permission to test and seal the equipment must be obtained for each specific incident. The individual will also notify the Regulatory Agency of the identity of the controls affected, the cause, if known, of the equipment failure, the repairs made and the results of testing. The individual will provide the identity and volume of milk and milk products processed during the period that temporary seals were applied to the Regulatory Agency;

f. If regulatory tests reveal that equipment or controls are not in compliance with the provisions of this *Ordinance*, all milk and milk products that were processed during that period may be recalled;

g. The Regulatory Agency or a properly trained regulatory official, commissioned by the responsible State, of each participating non-U.S. country or political subdivision thereof, will remove the temporary seal(s), retest the equipment and apply the regulatory seal(s) within ten (10) working days of notification by industry; and

h. No Grade "A" milk or milk products will be processed after ten (10) working days without the affected equipment being tested and sealed by the Regulatory Agency or a properly trained regulatory official, commissioned by the responsible State, of each participating non-U.S. country or political subdivision thereof.

In the case of milk plants with HACCP Plans regulated under the NCIMS HACCP Program, pasteurization and aseptic processing equipment may be tested and sealed by industry personnel acceptable to the Regulatory Agency, if the following conditions are met:

a. Test results for Pasteurization and Aseptic Processing Equipment Testing shall be recorded on a similar document for all milk plants. (Refer to the reference in Appendix M. for an example.)

b. Industry personnel conducting the Pasteurization and Aseptic Processing Equipment Testing must be adequately trained and must be able to demonstrate an acceptable understanding and ability to conduct these tests to the Regulatory Agency.

(1) Industry must physically demonstrate to the Regulatory Agency that they understand and can perform the required equipment tests according to the requirements of this *Ordinance*.

(2) The Regulatory Agency shall accept a field practical exercise, a written exam, formal classroom training, on-the-job training or any combination of these except that, if industry personnel do not physically demonstrate the appropriate capability to perform the tests to the satisfaction of the Regulatory Agency, they are not acceptable for conducting such tests.

(3) Continued training such as, but not limited to, on-the-job training with supervision or an acceptable pasteurizer training course should be completed before they reapply for pasteurizer equipment testing approval.

c. Pasteurization and Aseptic Processing Equipment Tests shall be conducted at a frequency not less than the requirements of this *Ordinance*. Industry shall have responsibility for the performance of all required tests. At least each six (6) months the Regulatory Agency shall physically supervise these tests. Regulatory supervised tests shall include the semi-annual HTST and HHST tests. These six (6) month tests should be performed at a time that is mutually convenient to all parties. Because these tests are required to support a CCP, the industry is responsible for conducting these tests even in the absence of the regulatory official.

d. Upon initial installation or extensive modification of any pasteurization and aseptic processing equipment, tests shall be physically supervised or conducted by the Regulatory Agency.

e. Sealing guidance for pasteurization equipment by industry is as follows:

(1) All equipment that is required to be sealed within this *Ordinance* shall also be sealed under the HACCP System. The sealing shall be done by a trained, qualified individual who is acceptable to the milk plant and the Regulatory Agency; and

(2) The Regulatory Agency may verify any equipment sealing and evaluate (accept or reject) the skills and knowledge of the individual performing the sealing.

f. During an audit, the auditor may conduct any or all of the Pasteurization or Aseptic Processing Equipment Tests. The auditor should, through a combination of physical examination of the equipment and a records review, satisfy themselves that the equipment is properly installed and operated.

Table 4. Equipment Tests - Batch, HTST, HHST and Aseptic Processing Systems (Refer to Appendix I.)		
1.	Vat, HTST, HHST, Aseptic indicating and airspace thermometers	Temperature accuracy
2.	Vat, HTST, HHST, Aseptic recording thermometer	Temperature accuracy
3.	Vat, HTST, HHST, Aseptic recording thermometer	Time accuracy
4.	Vat, HTST, HHST, Aseptic indicating and recording thermometer	Recording vs. Indicating thermometer
5.1	HTST, HHST FDD	Leakage pass FDD
5.2	HTST, HHST FDD	FDD freedom of movement
5.3	HTST, HHST FDD	Device assembly (single stem)
5.4	HTST, HHST FDD	Device assembly (dual stem)
5.5	HTST FDD	Manual diversion
5.6	HTST, HHST FDD	Response time
5.7	HTST, HHST FDD	Time delay (inspect)
5.8	HTST, HHST FDD	Time delay (CIP)
5.9	HTST FDD	Time delay (leak-detect flush)
6.	Vat leak-protector valve(s)	Leakage
7.	HTST indicating thermometers	Response time
8.	HTST recording thermometers	Response time
9.1	HTST pressure switches	Regenerator pressures
9.2.1	HTST, HHST, Aseptic differential pressure controllers	Calibration
9.2.2	HTST differential pressure controllers	Regenerator pressure
9.2.3	HTST*, HHST and Aseptic differential pressure controllers	Regenerator pressure
9.3.1	HTST booster pump/FDD	Inter-wiring check
9.3.2	HTST booster pump/metering pump	Inter-wiring check
10.1	HTST FDD	Temperature cut-in/cut-out
10.2	HTST*, HHST FDD, Aseptic divert system (indirect heat)	Temperature cut-in/cut-out
10.3	HTST*, HHST FDD, Aseptic divert system (direct heat)	Temperature cut-in/cut-out
11.1	HTST holding tubes/timing pumps (except magnetic flow meter based timing systems-MFMBTS)	Holding time
11.2.a	HTST holding tubes/ MFMBTS	Holding time
11.2.b	HTST, HHST, Aseptic MFMBTS	Flow alarm
11.2.c	HTST, HHST, Aseptic MFMBTS	Loss of signal/low flow
11.2.d	HTST magnetic flow meter based timing systems	Flow rate cut-in/cut-out
11.2.e	HTST magnetic flow meter based timing systems	Time delay
11.2.f	All magnetic flow meter based timing systems	High flow alarm response time
11.3	HHST holding tubes indirect heat	Holding time
11.4	HHST holding tubes direct injection heat	Holding time
11.5	HHST holding tubes direct infusion heat	Holding time
12.1	HTST*, HHST, Aseptic systems indirect heating	Sequence logic
12.2	HTST*, HHST, Aseptic systems direct heating	Sequence logic
13.	HHST, Aseptic systems	Pressure in the holding tube
14.	HTST*, HHST, Aseptic systems using direct injection heating	Pressure differential across injector
15.	HTST, HHST, Aseptic (all electronic controls)	Electro-Magnetic Interference

* For HTST systems with the FDD located downstream of the regenerator and/or cooler section.

ITEM 17p. COOLING OF MILK AND MILK PRODUCTS

All raw milk and milk products shall be maintained at 7ºC (45ºF) or less until processed. All whey and whey products for condensing and/or drying shall be maintained at a temperature of 7°C (45°F) or less; or 57°C (135°F) or greater until processed, except that acid-type whey with a titratable acidity of 0.40% or above, or a pH of 4.6 or below, is exempted from these temperature requirements.
All pasteurized milk and milk products, except the following, shall be cooled immediately prior to filling or packaging, in approved equipment, to a temperature of 7ºC (45ºF) or less, unless drying is commenced immediately after condensing:

1. Those to be cultured;
2. Cultured sour cream at all milkfat levels with the addition of potassium sorbate at a minimum of 0.05%* and a pH of 4.60 or below*;
3. Acidified sour cream at all milkfat levels with the addition of potassium sorbate at a minimum of 0.09%* and a pH of 4.60 or below*;
4. All yogurt products at all milkfat levels with an initial pH of 4.80 or below* at filling;
5. Cultured buttermilk at all milkfat levels with a pH of 4.60 or below*; and
6. All condensed whey and whey products shall be cooled during the crystallization process to 10°C (50°F) or less within seventy-two (72) hours of condensing, including the filling and emptying time, unless filling occurs above 57°C (135°F), in which case, the seventy-two (72) hour time period begins when cooling is started.

*Critical factors including, but not limited to, pH, potassium sorbate and cooling time and temperature shall be monitored and documented by the processing facility for verification by the Regulatory Agency. pH limit with a pH variance of + 0.05 units to account for reproducibility and inaccuracies in pH measurements. Formulation or processing changes that affect critical factors shall be communicated to the Regulatory Agency.

All pasteurized milk and milk products, except the following, shall be stored at a temperature of 7ºC (45ºF) or less and maintained thereat following filling or until further processed:

1. Cultured sour cream at all milkfat levels with the addition of potassium sorbate at a minimum of 0.05%* and a pH of 4.60 or below* and cooled to 7°C (45°F) within one hundred sixty eight (168) hours of filling**;
2. Acidified sour cream at all milkfat levels with the addition of potassium sorbate at a minimum of 0.09%* and a pH of 4.60 or below* and cooled to 7°C (45°F) within one hundred sixty eight (168) hours of filling**;
3. All yogurt products at all milkfat levels with an initial pH of 4.80 or below* at filling, with a pH of 4.60 or below within twenty-four (24) hours of filling* and cooled to 7°C (45°F) within ninety-six (96) hours of filling**; and
4. Cultured buttermilk at all milkfat levels with a pH of 4.60 or below* and cooled to 7°C (45°F) within twenty-four (24) hours of filling**.

*Critical factors including, but not limited to, pH, potassium sorbate and cooling time and temperature shall be monitored and documented by the processing facility for verification by

the Regulatory Agency. pH limit with a pH variance of + 0.05 units to account for reproducibility and inaccuracies in pH measurements. Formulation or processing changes that affect critical factors shall be communicated to the Regulatory Agency.
** Temperature monitored at the slowest cooling portion, i.e., middle of the container, of the slowest cooling container, i.e., in the middle of the pallet.

All pasteurized milk and milk products to be condensed and/or dried, shall be stored at a temperature of 10°C (50ºF) or less and be maintained thereat until further processed.
Every refrigerated room or tank in which milk or milk products, whey and whey products, and condensed milk and milk products are stored, shall be equipped with an accurate indicating thermometer.
On delivery vehicles, the temperature of milk and milk products shall not exceed 7ºC (45ºF).
Aseptically processed milk and milk products to be packaged in hermetically sealed containers shall be exempt from the cooling requirements of this Item.

PUBLIC HEALTH REASON

When milk and milk products are not cooled within a reasonable time, after being received at the milk plant, its bacterial content will be materially increased. The same reasoning applies to cooling the milk and milk products after pasteurization, unless drying is commenced immediately after condensing.

ADMINISTRATIVE PROCEDURES

This Item is deemed to be satisfied when:

1. All raw milk and milk products shall be maintained at 7ºC (45ºF) or less until processed, except that acid-type whey with a titratable acidity of 0.40% or above, or a pH of 4.6 or below, is exempted from these temperature requirements. Provided, that all balance or surge tanks (continuous flow with a retention time not to exceed one (1) hour) for raw milk and milk products, pasteurized milk and milk products and whey and whey products may be maintained at any temperature for up to twenty-four (24) hours.
2. All whey and whey products for condensing and/or drying are maintained at a temperature of 7°C (45°F) or less; or 57°C (135°F) or greater until processed. Storage tanks containing whey and whey product above 7°C (45°F) and below 57°C (135°F) shall be emptied, cleaned and sanitized after each four (4) hours of use or less. ***
3. All pasteurized milk and milk products, except the following, are cooled immediately in approved equipment prior to filling or packaging to a temperature of 7ºC (45ºF) or less, unless drying is commenced immediately after condensing:
   a. Those to be cultured;
   b. Cultured sour cream at all milkfat levels with the addition of potassium sorbate at a minimum of 0.05%* and a pH of 4.60 or below*;
   c. Acidified sour cream at all milkfat levels with the addition of potassium sorbate at a minimum of 0.09%* and a pH of 4.60 or below*;
   d. All yogurt products at all milkfat levels with an initial pH of 4.80 or below* at filling;
   e. Cultured buttermilk at all milkfat levels with a pH of 4.60 or below*; and

f. All condensed whey and whey products shall be cooled during the crystallization process to 10°C (50°F) or less within seventy-two (72) hours of condensing, including the filling and emptying time, unless filling occurs above 57°C (135°F), in which case, the seventy-two (72) hour time period begins when cooling is started. ***

*Critical factors including, but not limited to, pH, potassium sorbate and cooling time and temperature shall be monitored and documented by the processing facility for verification by the Regulatory Agency. pH limit with a pH variance of + 0.05 units to account for reproducibility and inaccuracies in pH measurements. Formulation or processing changes that affect critical factors shall be communicated to the Regulatory Agency.

4. All pasteurized milk and milk products, except the following, shall be stored at a temperature of 7°C (45ºF) or less and be maintained thereat following filling or until further processed:

a. Cultured sour cream at all milkfat levels with the addition of potassium sorbate at a minimum of 0.05%* and a pH of 4.60 or below* and cooled to 7°C (45°F) within one hundred sixty eight (168) hours of filling**;

b.Acidified sour cream at all milkfat levels with the addition of potassium sorbate at a minimum of 0.09% and a pH of 4.60 or below* and cooled to 7°C (45°F) within one hundred sixty eight (168) hours of filling**;

c. All yogurt products at all milkfat levels with an initial pH of 4.80 or below* at filling, with a pH of 4.60 or below within twenty-four (24) hours of filling* and cooled to 7°C (45°F) within ninety-six (96) hours of filling**; and

d. Cultured buttermilk at all milkfat levels with a pH of 4.60 or below* and cooled to 7°C (45°F) within twenty-four (24) hours of filling**.

*Critical factors including, but not limited to, pH, potassium sorbate and cooling time and temperature shall be monitored and documented by the processing facility for verification by the Regulatory Agency. pH limit with a pH variance of + 0.05 units to account for reproducibility and inaccuracies in pH measurements. Formulation or processing changes that affect critical factors shall be communicated to the Regulatory Agency.

** Temperature monitored at the slowest cooling portion, i.e., middle of the container, of the slowest cooling container, i.e., in the middle of the pallet.

5. All pasteurized milk and milk products to be condensed and/or dried, shall be stored at a temperature of 10ºC (50ºF) or less and be maintained thereat until further processed. If storage tanks are used between the condenser and dryer, any such storage tank(s) containing pasteurized milk or milk products stored above 10°C (50°F) and below 57°C (135°F) shall be completely emptied and cleaned after each six (6) hours of operation or less. ***

6. Each refrigerated room in which milk and milk products are stored, except aseptically processed milk and milk products, is equipped with an indicating thermometer that complies with the applicable specifications of Appendix H. Such thermometer shall be located in the warmest zone of the refrigerated room.

7. Each storage tank shall be equipped with an indicating thermometer, the sensor of which shall be located to permit the registering of the temperature of the contents when the tank contains no more than twenty percent (20%) of its calibrated capacity. Such thermometer shall comply with the applicable specifications of Appendix H.

8. On delivery vehicles, the temperature of milk and milk products shall not exceed 7ºC (45ºF).

9. All surface coolers comply with the following specifications:

a. The sections of open-surface coolers shall be so installed as to leave a gap of at least 6.4 millimeters (0.25 inches) between the header sections to permit easy cleaning.

b. Where header ends are not completely enclosed within the cooler covers, condensation or leakage from the headers shall be prevented from entering the milk or milk product by so shaping the exposed header faces, above and below all gaps, that condensation is directed away from the tubes, and by using deflectors at the bottom of the headers; or by shortening the bottom of the headers; or by shortening the bottom trough; or by some other approved method.

c. The location of supports of cooler sections shall prevent condensation and leakage from entering the milk or milk product.

d. All open-surface coolers shall be provided with tight-fitting shields that protect the milk and milk product from contamination by insects, dust, drip, splash or manual contact.

10. Recirculated cooling water, which is used in coolers and heat exchangers, including those systems in which a freezing point depressant is used, is from a safe source and protected from contamination. Such water shall be tested semiannually and shall comply with the Bacteriological Standards of Appendix G. Samples shall be taken by the Regulatory Agency and examination shall be conducted in an Official Laboratory. Recirculated cooling water systems, which become contaminated through repair work or otherwise, shall be properly treated and tested before being returned to use. Freezing point depressants and other chemical additives, when used in recirculating systems, shall be non-toxic under conditions of use.

Recirculated cooling water contained in corrosion resistant, continuous piping, with no joints or welds, which fail to meet applicable ASME or equivalent standards in the non-potable water contact areas, may be considered to be protected from contamination, as required above, when cooled by non-potable water flowing over the exterior of the piping, within open evaporative type cooling tower. In these systems, the recirculated cooling water piping shall be properly maintained and shall be installed so that it is at least two (2) pipe diameters above the flood rim of the cooling tower.

*** **NOTE:** Nothing shall be construed as barring other time and temperature relationships, which have been recognized by FDA to be equally efficient and which are approved by the Regulatory Agency.

ITEM 18p. BOTTLING, PACKAGING AND CONTAINER FILLING

Bottling, packaging and container filling of milk and milk products shall be done at the place of pasteurization in a sanitary manner by approved mechanical equipment.[11]

For milk plants that dry milk products, these dry milk products shall be packaged in new containers, which protect the contents from contamination, and after packaging, shall be stored in a sanitary manner.

For milk plants that condense and/or dry milk or milk products, these condensed and dry milk products may be transported in sealed containers in a sanitary manner from one (1) milk plant to another for further processing and/or packaging.

Condensed and dry milk product packaging containers shall be stored in a sanitary manner.

PUBLIC HEALTH REASON

Manual bottling, packaging and container filling is very apt to result in the exposure of the milk and milk products to contamination, which would nullify the effect of pasteurization. The transfer of milk and milk products from the place of pasteurization to another milk plant for bottling, packaging or container filling may subject the pasteurized milk or milk product to unnecessary risks of contamination. Reuse of packages for dry milk products is likely to result in contamination of the dry milk products.

ADMINISTRATIVE PROCEDURES[12]

This Item is deemed to be satisfied when:

1. All milk and milk products, including concentrated (condensed) milk and milk products, are bottled and packaged at the milk plant where final pasteurization is performed. Such bottling and packaging shall be done without undue delay following final pasteurization.
2. All bottling or packaging is done on approved mechanical equipment. The term "approved mechanical equipment" shall not be interpreted to exclude manually operated machinery, but is interpreted to exclude methods in which the bottling and capping devices are not integral within the same system.
3. All pipes, connections, defoaming devices and similar appurtenances shall comply with Items 10p and 11p of this Section. Milk and milk products from continuous defoamers are not returned directly to the filler bowl.
4. Bottling or packaging machine supply tanks and bowls are equipped with covers that are constructed to prevent any contamination from reaching the inside of the filler tank or bowl. All covers shall be in place during operation.
5. A drip deflector is installed on each filler valve. Drip deflectors shall be designed and adjusted to divert condensation away from the open container.
6. Container in-feed conveyors to automatic bottling or packaging machines have overhead shields to protect the bottles or packages from contamination. These shields shall extend from the bottle washer discharge to the bottle feed-star, or in the case of single-service packaging machines, from the forming unit discharge to the filling unit and from the filling unit to the closure unit. Overhead shields shall be required on can in-feed conveyors when the cans are fed to the filler with the covers off.
7. Container coding/dating devices are designed, installed and operated such that the coding/dating operations are performed in a manner that open containers are not subjected to contamination. Shielding shall be properly designed and installed to preclude the contamination of open containers.
8. Container fabricating materials, such as paper stock, foil, wax, plastic, etc., are handled in a sanitary manner and protected against undue exposure during the package assembly operation.
9. Bottling and packaging machine floats are designed to be adjustable without removing the cover.
10. The filler pipe of all bottling and packaging machines have a diversion apron or other acceptable device, as close to the filler bowl as possible, to prevent condensation from entering the inside of the filler bowl.

11. Filling cylinders on packaging machines are protected from contamination by overhead shields. When lubricants are used on filler pistons, cylinders or other milk or milk product-contact surfaces, the lubricant shall be food-grade and applied in a sanitary manner.
12. In the case of aseptic processing systems, the milk and milk product shall be aseptically filled into sterilized containers and hermetically sealed in conformance with the applicable requirements of 21 CFR 113.

For milk plants that condense and/or dry milk or milk products, the following shall apply:

1. The filling of condensed and dry milk product containers is done by mechanical equipment. The term "mechanical equipment" shall not be interpreted to exclude manually operated equipment.
2. All pipes, connections and similar appurtenances comply with Items 10p and 11p.
3. Filling devices are constructed so as to prevent any contamination from reaching the product. Covers of filling devices, if used, shall be in place during operation.
4. Packaged dry milk and milk products are stored and arranged so as to be easily accessible for inspection and to permit cleaning of the storage room.
5. All condensed and dry milk product containers are filled in a sanitary manner by methods which:
    a. Protect the product from airborne contamination;
    b. Prevent manual contact with condensed and dry milk product-contact surfaces; and
    c. Minimize manual contact with the product.
6. All final containers for dry milk products shall be new and of the single-service type and sufficiently substantial to protect the contents from impairment of quality with respect to sanitation, contamination and moisture, under customary conditions of handling, transportation, and storage.
7. If portable storage bins are used, they comply with the applicable provisions of Items 10p and 11p.
8. Containers are closed immediately after being filled.

ITEM 19p. CAPPING, CONTAINER CLOSURE AND SEALING AND DRY MILK PRODUCT STORAGE

Capping, closing or sealing of milk and milk product containers shall be done in a sanitary manner by approved mechanical capping, closing and/or sealing equipment. The cap or closure shall be designed and applied in such a manner that the pouring lip is protected to at least its largest diameter and, with regard to fluid product containers, removal cannot be made without detection.

PUBLIC HEALTH REASON

Improper closing or sealing and hand capping exposes the milk or milk product to contamination. A cover extending over the pouring lip of the container protects it from contamination during subsequent handling, and prevents the sucking back into the bottle, by temperature contraction, of any contaminated liquid on the cap, including milk or milk product that has been forced out by temperature expansion and may have become contaminated. Caps or

closures that are applied in such a manner that they cannot be removed without detection help to assure the consumer that the milk and milk products have not been contaminated after packaging.

ADMINISTRATIVE PROCEDURES[13]

This Item is deemed to be satisfied when:

1. The capping, closing or sealing of milk and milk product containers is done in a sanitary manner on approved mechanical capping, closing and/or sealing equipment. The term "approved mechanical capping, closing and/or sealing equipment" shall not exclude manually operated machinery. Hand capping shall be prohibited. Provided, that if suitable mechanical equipment, for the capping or closing of container(s) of 12.8 liters (3 gallons) or more is not available, other methods which eliminate all possibility of contamination may be approved by the Regulatory Agency.
2. All mechanical capping, closing or sealing mechanisms are designed to minimize the need for adjustment during operation.
3. Bottles and packages that have been imperfectly capped or closed are emptied immediately into approved sanitary containers. Such milk or milk products shall be protected from contamination, maintained at 7ºC (45ºF) or less, except dry milk products, and subsequently repasteurized or discarded.
4. All caps and closures are designed and applied in such a manner that the pouring lip is protected to at least its largest diameter and, with respect to fluid milk and milk product containers, removal cannot be made without detection. Single-service containers are so constructed that the product and the pouring and opening areas are protected from contamination during handling, storage and when the containers are initially opened.
5. All caps and closures are handled in a sanitary manner. The first cap from each tube, the first lap(s) from each roll of cap or cover stock and the first sheet of parchment or cover paper shall be discarded. The subsequent use of loose caps that are left in the cappers at the end of an operating period, after removal from the cap tubes, shall be a violation of this Item, provided, that loose plastic caps and closures supplied by the manufacturer in plastic bags may be returned to storage in a protective wrap if removed from a hopper/descrambler immediately after a production run. Plastic caps and closures remaining in the chute between the hopper and the capping device shall be discarded.
6. All dry milk products are stored in a sanitary manner.

ITEM 20p. PERSONNEL - CLEANLINESS

Hands shall be thoroughly washed before commencing milk plant functions and as often as may be required to remove soil and contamination. No employee shall resume work after visiting the toilet room without thoroughly washing their hands. All persons, while engaged in the handling, processing, pasteurization, storage, transportation, or packaging of milk or milk products, containers, utensils and equipment shall wear clean outer garments. All persons, while engaged in the processing of milk or milk products, shall wear adequate hair coverings and shall not use tobacco.

PUBLIC HEALTH REASON

Clean clothing and clean hands, including clean fingernails, reduce the possibility of milk or milk products, containers, utensils and equipment becoming contaminated.

ADMINISTRATIVE PROCEDURES

This Item is deemed to be satisfied when:

1. Hands are thoroughly washed before commencing milk plant functions and as often as may be required to remove soil and contamination.
2. Each employee washes their hands following a visit to the toilet room and prior to resuming work.
3. All persons while engaged in the handling, processing, pasteurization, storage, transportation, or packaging of milk or milk products containers, utensils, and equipment wear clean outer garments.
4. The use of tobacco products is prohibited in all rooms in which milk and milk products are handled, processed or stored, or in which milk or milk product containers, utensils and/or equipment are washed. These rooms shall include, but are not limited to, the receiving, processing, packaging, milk and milk product storage, cooling and dry storage ingredients, single-service article storage and container/utensil wash-up areas. Any person engaged in the processing of milk or milk products wears adequate hair coverings.
5. Specially provided clean rubbers or boot covers, clean coveralls, and white cap, clean cloth or paper, are worn whenever it is necessary to enter the drying chambers. Such articles of clothing are stored in such a manner as to be protected from contamination. Boot covers, which have come into contact with areas other than those within the dryer, are not considered clean.

ITEM 21p. VEHICLES

All vehicles used for the transportation of pasteurized milk and milk products shall be constructed and operated so that the milk and milk products are maintained at 7ºC (45ºF) or less and are protected from contamination. Milk tank cars, milk tank trucks, and portable shipping bins shall not be used to transport or contain any substances that may be toxic or harmful to humans.

PUBLIC HEALTH REASON

Milk and milk products, as well as empty containers, should be protected against contamination at all times.

ADMINISTRATIVE PROCEDURES

This Item is deemed to be satisfied when:

1. All vehicles are kept clean.

2. Material that is capable of contaminating milk or milk products is not transported with milk or milk products.
3. Milk and milk products, except dry milk products, are maintained at 7°C (45°F) or less.
4. The operation of milk tank cars and shipping bins comply with the following provisions:
   a. Milk and milk products shall be conducted to and from tank cars or shipping bins only through sanitary conveying equipment. Such equipment shall be capped or otherwise protected when not in use.
   b. Inlets and outlets of shipping bins shall be provided with tight-fitting dust caps or covers.
   c. Facilities shall be provided for the adequate washing and sanitizing of shipping bins, piping, and accessories at all milk plants receiving or shipping milk or milk products in shipping bins.
   d. Shipping bins shall be cleaned at the receiving milk plant immediately after being emptied. The clean shipping bins shall be sanitized at the shipping milk plant before loading. Milk tank trucks, which must make more than one trip while unloading a tank car, need not be cleaned and sanitized after each time they are emptied.
   e. Piping connections and pumps used with shipping bins shall be cleaned and sanitized after each use.
5. The doors of tank cars and covers of shipping bins are sealed with a metal seal immediately after loading. The seal shall remain unbroken until the contents are delivered to the consignee. Contents of the tank car or shipping bin shall be labeled as prescribed in Section 4 by means of a tag attached to the tank car or shipping bin.
6. Vehicles have fully enclosed bodies with well-fitted, solid doors.

ITEM 22p. SURROUNDINGS

Milk plant surroundings shall be kept neat, clean and free from conditions which might attract or harbor flies, other insects and rodents or which otherwise constitute a nuisance.

PUBLIC HEALTH REASON

The surroundings of a milk plant should be kept neat and clean to prevent attracting rodents, flies and other insects, which may contaminate the milk or milk products. Insecticides and rodenticides, not approved for use in milk plants, or approved insecticides and rodenticides, not used in accordance with label recommendations, may contaminate the milk or milk products processed by the milk plant.

ADMINISTRATIVE PROCEDURES

This Item is deemed to be satisfied when:

1. There is no accumulation of trash, garbage or similar waste in areas adjacent to the milk plant. Waste material stored in suitable covered containers shall be considered in compliance.
2. Driveways, lanes and areas serving milk plant vehicular traffic are graded, drained and free from pools of standing water.
3. Outdoor areas for milk tank truck unloading are constructed of smooth concrete or equally impervious material, properly sloped to drain and equipped with trapped drains of sufficient size.

4. Only insecticides and rodenticides approved for use by the Regulatory Agency and/or registered with EPA shall be used for insect and rodent control.
5. Rooftops are kept clean of dry milk or milk products, which may accumulate and contribute to unsanitary conditions.

NOTE: Appendix M. provides a source for milk plant, receiving station and transfer station inspection forms, which summarize the applicable sanitation requirements of this Section.

SECTION 8. ANIMAL HEALTH

1. All milk for pasteurization shall be from herds in Areas which have a Modified Accredited Advanced Tuberculosis status or greater as determined by the USDA. Provided, that in an Area which fails to maintain such status, any herd shall have been accredited by said Department as tuberculosis free, or shall have passed an annual tuberculosis test, or the Area shall have established a tuberculosis testing protocol for livestock that assures tuberculosis protection and surveillance of the dairy industry within the Area and that it is approved by FDA, USDA and the Regulatory Agency.

2. All milk for pasteurization shall be from herds under a brucellosis eradication program, which meets one (1) of the following conditions:
   a. Located in a Certified Brucellosis-Free Area as defined by USDA and enrolled in the testing program for such areas; or
   b. Meet USDA requirements for an individually certified herd; or
   c. Participating in a milk ring testing program at least two (2) times per year at approximately one hundred eighty (180) day intervals and all herds with positive milk ring results shall have the entire herd blood tested within thirty (30) days from the date of the laboratory ring tests; or
   d. Have an individual blood agglutination test annually with an allowable maximum grace period not exceeding two (2) months.

3. Goat, sheep, water buffalo, or any other hooved mammal milk for pasteurization, ultra-pasteurization or aseptic processing, defined under this *Ordinance*, shall be from a herd or flock that:
   a. Has passed an annual whole herd or flock brucellosis test as recommended by the State Veterinarian or USDA Area Veterinarian in Charge (AVIC); or
   b. Has passed an initial whole herd brucellosis test, followed only by testing replacement animals or any animals entering the milking group or sold as dairy animals; or
   c. Has passed an annual random blood-testing program sufficient to provide a confidence level of 99% with a P value of 0.05. Any herd or flock with one (1) or more confirmed positive animals shall go to 100% testing until the whole herd tests show no positive animals are found; or
   d. Has passed a USDA approved bulk milk test, at USDA recommended frequency, with an implementation date based on availability of the test.

(Refer to the **NOTE:** on page 26.)

The following table[14] will provide the random sampling size needed to achieve 99% confidence with a P value of 0.05:

Herd/Flock Size	Sampling Size	Herd/Flock Size	Sampling Size
20	20	500	82
50	41	600	83
100	59	700	84
150	67	800	85
200	72	1000	86
250	75	1400	87
300	77	1800	88
350	79	4000	89
400	80	10000	89
450	81	100000	90

4. For diseases other than brucellosis and tuberculosis, the Regulatory Agency shall require such physical, chemical or bacteriological tests, as it deems necessary. The diagnosis of other diseases in dairy animals shall be based upon the findings of a licensed and accredited[15] veterinarian or an accredited veterinarian in the employ of an official Agency. Any diseased animal disclosed by such test(s) shall be disposed of as the Regulatory Agency directs.

5. Records supporting the tests required in this Section shall be available to the Regulatory Agency and be validated with the signature of a licensed and accredited veterinarian or an accredited veterinarian in the employ of an official Agency.

PUBLIC HEALTH REASON

The health of the animal is a very important consideration, because a number of diseases of cattle, including tuberculosis, brucellosis, Q-fever, salmonellosis, staphylococcal infection and streptococci infection, may be transmitted to man through the medium of milk. The organisms of most of these diseases may get into the milk either directly from the udder, or indirectly through infected body discharges which may drop, splash or be blown into the milk.
The great reduction in the incidence of bovine tuberculosis in man indicates that the practice of good sanitation in animal husbandry, the testing of dairy animals and removal of the reactors from the herds, and the pasteurization of milk, have been effective in the control of this disease. The reservoir of bovine tuberculosis still exists; however, constant vigilance against this disease must be continued by industry and Regulatory Agencies.

ADMINISTRATIVE PROCEDURES

BOVINE TUBERCULOSIS: All tuberculin tests and retests shall be made, and any reactors disposed of, in accordance with the current edition of *Uniform Methods and Rules; Bovine Tuberculosis Eradication, Uniform Methods and Rules for Establishment and Maintenance of Tuberculosis-Free Accredited Herds of Cattle, Modified Accredited Areas and Areas Accredited Free of Bovine Tuberculosis in the Domestic Bovine*, as published by USDA. For tuberculosis

test purposes, the herd is defined as all adult cattle twenty-four (24) months of age and over, including any commingled beef animals. Dairy cattle less than two (2) years of age and already milking shall be included in the herd test. A letter or other official correspondence attesting to the accreditation status of the locality in which the herd is located, including the date of accreditation, or a certificate identifying the animals tested, the date of injection, the date of reading of the test and the results of the test signed by a USDA accredited veterinarian, shall be evidence of compliance with the above requirements and shall be filed with the Regulatory Agency. (Refer to Appendix A.)

BOVINE BRUCELLOSIS: All brucellosis tests, retests, disposal of reactors, vaccination of calves and certification of herds and areas shall be in accordance with the current edition of *Brucellosis Eradication, Recommended Uniform Methods and Rules,* as published by USDA. All reactors disclosed on blood agglutination tests shall be separated immediately from the milking herd and the milk of these reactors shall not be used for human consumption.
A certificate identifying each animal, signed by the veterinarian and the director of the laboratory making the test, shall be filed as directed by the Regulatory Agency. Provided, that in the event the herd is subject to the milk ring test, the record shall be required to show only the date and results of such test. Within thirty (30) days following the expiration of an official milk ring testing program, or in the case of a herd subject to annual blood tests, thirteen (13) months following the last annual blood tests, the Regulatory Agency shall notify the herd owner or operator of the necessity to comply with the brucellosis requirements. The failure of the herd owner or operator to comply with the brucellosis requirements within thirty (30) days of written notice shall result in immediate suspension of the permit. (Refer to Appendix A.)

SECTION 9. MILK AND MILK PRODUCTS WHICH MAY BE SOLD

From and after twelve (12) months from the date on which this *Ordinance* is adopted, only Grade “A” pasteurized, ultra-pasteurized, or aseptically processed milk and milk products shall be sold to the final consumer, to restaurants, soda fountains, grocery stores or similar establishments. Provided, only Grade "A" milk and milk products shall be sold to milk plants for use in the commercial preparation of Grade "A' milk and milk products. Provided further, that in an emergency, the sale of pasteurized milk and milk products, which have not been graded, or the grade of which is unknown, may be authorized by the Regulatory Agency, in which case, such milk and milk products shall be labeled "ungraded".

SECTION 10. TRANSFERRING; DELIVERY CONTAINERS; AND COOLING

Except as permitted in this Section, no milk producer, bulk milk hauler/sampler or distributor shall transfer milk or milk products from one (1) container or milk tank truck to another on the street, in any vehicle, store or in any place except a milk plant, receiving station, transfer station or milkhouse especially used for that purpose. The dipping or ladling of milk or fluid milk products is prohibited.

It shall be unlawful to sell or offer for sale any pasteurized milk or milk products that have not been maintained at the temperature set forth in Section 7 of this *Ordinance*. If containers of pasteurized milk or milk products are stored in ice, the storage container shall be properly drained.

ADMINISTRATIVE PROCEDURES

TRANSFERRING: The dipping or ladling of milk and fluid milk products is expressly prohibited, except for immediate cooking purposes. Milk and milk product containers, which have been filled and sealed at a milk plant, shall be used for the delivery of milk or milk products. Caps, closures or labels shall not be removed or replaced during transportation.

BULK DISPENSERS: Bulk dispensers, approved by the Regulatory Agency, shall satisfy the following sanitary design, construction and operation requirements:

1. All dispensers shall comply with the applicable requirements of Section 7 of this *Ordinance*.
2. Product-contact surfaces shall be inaccessible to manual contact, droplet infection, dust or insects, but the delivery orifice may be exempted from this requirement.
3. All parts of the dispensing device with which milk or milk products come into contact, including any measuring device, shall be thoroughly cleaned and sanitized at the milk plant. Provided, that dispensing valves, which are applied to the dispenser subsequent to its delivery to the retail vendor may be cleaned and sanitized at such establishments.
4. The dispensing container shall be filled at the milk plant and shall be sealed so that it is impossible to withdraw any part of its contents, or to introduce any substance without breaking the seal(s).
5. The milk or milk products shall be thoroughly and automatically mixed with each dispensing operation, except for milk or milk products that remain homogeneous.
6. All cans shall be thoroughly cleaned and sanitized. Milk and milk products shall be kept at or below 7ºC (45ºF) at all times. The dispenser tube shall be integral with the dispensing container, shall be protected and shall be under adequate refrigeration during transportation and storage.

SECTION 11. MILK AND MILK PRODUCTS FROM POINTS BEYOND THE LIMITS OF ROUTINE INSPECTION

Milk and milk products, from points beyond the limits of routine inspection of the ... of... or its jurisdiction, shall be sold in…, [1] or its jurisdiction provided they are produced and pasteurized, ultra-pasteurized, aseptically processed, concentrated (condensed) or dried under regulations which are substantially equivalent to this *Ordinance* and have been awarded acceptable Milk Sanitation Compliance and Enforcement Ratings or have been awarded a satisfactory HACCP listing, under the NCIMS HACCP Program as specified in Appendix K. of this *Ordinance*, or are from a country that PHS/FDA has determined, after conferring with NCIMS, to have in place a public health regulatory program and government oversight of that program that have an equivalent effect on the safety of regulated milk and/or milk products.

ADMINISTRATIVE PROCEDURES

The Regulatory Agency should accept, without their actual physical inspection, supplies of milk and milk products from an area or an individual shipper not under their routine inspection. Provided, that:

1. Milk and milk products upon arrival shall comply with bacteriological, physical, chemical and temperature standards of Section 7. Provided, that direct shipped producer milk that is under the supervision of more than one (1) Regulatory Agency may be exempt from the bacteriological requirement for commingled samples. However, the receiving Regulatory Agency shall have the right to use the individual producer samples to determine compliance with the bacteriological standards.
2. After receipt, pasteurized, ultra-pasteurized, aseptically processed, concentrated (condensed) or dried milk and milk products shall comply with Sections 2, 4 and 10.

NOTE: Raw and pasteurized milk and milk products beyond the limits of routine inspection shall be sampled as the Regulatory Agency requires.

3. The milk or milk products are produced and processed under regulations substantially equivalent to those of this *Ordinance*.
4. The supplies are under routine official supervision;
5. The supplies have been awarded, by a Milk Sanitation Rating Officer (SRO), certified by FDA, Milk Sanitation Compliance and Enforcement Ratings equal to that of the local supply or equal to ninety percent (90%) or higher; and
6. All ratings are made on the basis of procedures outlined in the *Methods of Making Sanitation Ratings of Milk Supplies* (MMSR).

NOTE: Names of interstate milk shippers and their ratings, as reported by State Rating Agencies, are contained in the *IMS List-Sanitation Compliance and Enforcement Ratings of Interstate Milk Shippers* (IMS List), issued electronically by FDA. This list may be obtained from the FDA web site at www.fda.gov.

7. The supplies have been awarded, by a SRO, certified by FDA, a satisfactory listing under the NCIMS HACCP Program as specified in Appendix K. of this *Ordinance*.
8. The foreign supplies have been awarded a satisfactory listing, by an NCIMS Certified Third Party Rating Officer standardized by the FDA, under the NCIMS Third Party Certification Pilot Program. This provision will expire December 31, 2007, unless extended by future conference action.
9. FDA has determined that the foreign country's public health regulatory program and the government oversight of that program have an equivalent effect on the safety of the regulated milk and/or milk product. It is PHS/FDA's responsibility to determine equivalence and PHS/FDA will confer with NCIMS prior to finalizing a determination of equivalence. The foreign government must provide adequate assurance that the level of public health protection provided by its dairy safety system is equivalent to that provided by the NCIMS program.

SECTION 12. PLANS FOR CONSTRUCTION AND RECONSTRUCTION

Properly prepared plans for all milkhouses, milking barns, stables and parlors, milk tank truck cleaning facilities, milk plants, receiving stations and transfer stations regulated under this *Ordinance,* which are hereafter constructed, reconstructed or extensively altered shall be submitted to the Regulatory Agency for written approval before work is begun.

SECTION 13. PERSONNEL HEALTH

No persons affected with any disease capable of being transmitted to others through the contamination of food shall work at a milk plant in any capacity which brings them into direct contact with pasteurized milk or milk products or which brings them into direct contact with associated pasteurized or aseptically processed milk or milk product-contact surfaces.
In the case of milk plants, receiving stations, or transfer stations that have HACCP Systems, which are regulated under the NCIMS HACCP Program, the HACCP System shall address the public health concerns described in this Section in a manner that provides protection equivalent to the requirements in this Section.

ADMINISTRATIVE PROCEDURES

Milk plant operators who have received reports, under this Section, from employees who have handled pasteurized milk or milk products or associated milk or milk product-contact surfaces shall immediately report these facts to the appropriate Milk Regulatory Agency.
Milk plant employees, or applicants to whom a conditional offer of employment has been made, shall be instructed by the milk plant that the employee or applicant or applicants to whom a conditional offer of employment has been made is responsible to report to the milk plant management, in a manner that allows the milk plant to prevent the likelihood of the transmission of diseases that are transmissible through foods, if the employee or applicant to whom a conditional offer of employment has been made:

1. Is diagnosed with an illness due to Hepatitis A virus, *Salmonella typhi, Shigella* species, Norwalk and Norwalk-like Viruses, *Staphylococcus aureus, Streptococcus pyogenes, Escherichia coli* 0157:H7*,* enterohemorrhagic *Escherichia coli, enterotoxigenic Escherichia coli, Campylobacter jejuni, Entamoeba histolytica, Giardia lamblia,* Non-typhoidal *Salmonella, Rotovirus, Taenia solium, Yersinia enterocolitica, Vibrio cholerae O1* or other infectious or communicable disease that has been declared by the Secretary of Health and Human Services (HHS) to be transmissible to others through the handling of food, or has been clearly shown to be so based upon verifiable epidemiological data; or
2. Is exposed to, or suspected of causing, a confirmed foodborne disease outbreak of one (1) of the diseases specified in Item 1 above, including an outbreak at an event such as a family meal, church supper or ethnic festival because the employee or applicant to whom a conditional offer of employment has been made:
    a. Prepared food implicated in the outbreak; or
    b. Consumed food implicated in the outbreak; or
    c. Consumed food at the event prepared by a person who is infected or ill.

3. Lives in the same household as a person who attends or works in a day care center or school, similar institution experiencing a confirmed outbreak of one (1) of the diseases specified in Item 1 above.

Similarly, milk plant employees shall be instructed by the milk plant management to report to the milk plant management if the employee, or applicant to whom a conditional offer of employment has been made.

4. Has a symptom associated with acute gastrointestinal illness such as: Abdominal cramps or discomfort, diarrhea, fever, loss of appetite for three (3) or more days, vomiting, jaundice; or
5. Has a pustular lesion such as a boil or infected wound that is:
   a. On the hands, wrists or exposed portions of the arms, unless the lesion is covered by a durable, moisture proof, tight-fitting barrier; or
   b. On other parts of the body if the lesion is open or draining, unless the lesion is covered by a durable, moisture proof, tight-fitting barrier.

SECTION 14. PROCEDURE WHEN INFECTION OR HIGH RISK OF INFECTION IS DISCOVERED

When a person who may have handled pasteurized or aseptically processed milk or milk products or pasteurized or aseptically processed milk or milk product-contact surfaces meets one (1) or more of the conditions specified in the Administrative Procedures of Section 13, the Milk Regulatory Agency is authorized to require any or all of the following measures:

1. The immediate restricting of that person from duties that require handling pasteurized milk or milk products, or the handling of related milk or milk product-contact surfaces. This restriction may be lifted after an appropriate medical clearance or cessation of symptoms or both, according to the following Table:

Table 5. Removal of Restrictions when Infection or High Risk of Infection is Discovered	
Health Status	**Removing Restrictions**
a. Is diagnosed with an illness due to Hepatitis A virus, *Salmonella typhi, Shigella* species, Norwalk and Norwalk-like Viruses, *Staphylococcus aureus, Streptococcus pyogenes, Escherichia coli* 0157:H7, enterohemorrhagic *Escherichia coli, enterotoxigenic Escherichia coli, Campylobactor jejuni, Entamoeba histolytica, Giardia lamblia,* Non-typhoidal *Salmonella,* Rotovirus, *Taenia solium, Yersinia enterocolitica, Vibrio cholerae* O1 or other infectious or communicable disease that has been declared by the Secretary of HHS to be transmissible to others through the handling of food or has been clearly shown to be so based upon verifiable epidemiological data.	Restrictions lifted by medical clearance.
b. Meeting a high-risk scenario as specified in Section 13 (2 or 3) and/or experiencing symptoms in Section 13 (4 or 5).	Restrictions lifted when symptoms cease or medical documentation is provided that infection does not exist.
c. Asymptomatic, but stools positive for *Salmonella typhi, Shigella* or *Escherichia coli* 0157:H7.	Restrictions lifted by medical clearance.
d. Past illness from *Salmonella typhi, Shigella, Escherichia coli* 0157:H7 or other human pathogens for which humans have been determined to be carriers.	Restrictions lifted by medical clearance.
e. In the case of diagnosed or suspected Hepatitis A, onset of jaundice within the last seven (7) days.	Restrictions lifted by medical clearance.
f. In the case of diagnosed or suspected Hepatitis A, onset of jaundice occurred more than seven (7) days ago.	Restrictions lifted by medical clearance or jaundice ceases.

2. The immediate exclusion of the affected milk or milk products from distribution and use when medically appropriate, i.e., a medical evaluation of the sequence of events indicates that contamination of milk or milk product may have occurred.
3. The immediate requesting of medical and bacteriological examination of the person at risk.

NOTE: Persons at risk who decline to be examined may be reassigned to duties where they will not be required to handle pasteurized, ultra-pasteurized or aseptically processed milk or milk products and associated milk or milk product-contact surfaces.

In the case of milk plants, receiving stations, or transfer stations that have HACCP Systems, which are regulated under the NCIMS HACCP Program, the HACCP System shall address the public health concerns described in this Section in a manner that provides protection equivalent to the requirements in this Section.

SECTION 15. ENFORCEMENT

This *Ordinance* shall be enforced by the Regulatory Agency in accordance with the *Grade "A" PMO*, with Administrative Procedures, current edition. A certified copy[16] of which shall be on file at the appropriate Regulatory Agency's office. Where the mandatory compliance with provisions of the Appendixes is specified, such provisions shall be deemed a requirement of this *Ordinance*.

SECTION 16. PENALTY

Any person who shall violate any of the provisions of this *Ordinance* shall be guilty of a misdemeanor and upon conviction thereof shall be punished by a fine of not more than $ ... and/or such persons may be enjoined from continuing such violation(s). Each day upon which such a violation(s) occurs shall constitute a separate violation.

SECTION 17. REPEAL AND DATE OF EFFECT

All ordinances and parts of ordinances in conflict with this *Ordinance* shall be repealed twelve (12) months after the adoption of this *Ordinance*, at which time this *Ordinance* shall be in full force and effect, as provided by law.

SECTION 18. SEPARABILITY CLAUSE

Should any Section, paragraph, sentence, clause or phrase of this *Ordinance* be declared unconstitutional or invalid for any reason, the remainder of this *Ordinance* shall not be affected thereby.

FOOTNOTES

In the interest of clarity and to provide easy access to their information, all numbered footnotes have been removed from the body of this *Ordinance* and are assembled in this Section. A numerical reference in the text will always relate to its like numbered footnote in this Section.

1. Substitute proper legal jurisdiction here and in all similar places throughout this *Ordinance.*

2. Regulatory Agencies desiring to regulate cottage cheese and dry curd cottage cheese under the terms of this *Ordinance* should insert the following definitions:

   Cottage cheese is the product defined in 21 CFR 133.128.
   Dry curd cottage cheese is the product defined in 21 CFR 133.129.

3. Whey, caseinates, lactalbumin and other milk derived ingredients are required to be derived from a Grade "A" raw milk source.

4. Where State law does not permit the sale of reconstituted or recombined milk and/or milk products, Definition HH and other corresponding references should be omitted.

5. The permit for a milk tank truck may be issued to the responsible person for the milk tank truck(s).

6. Regulatory Agencies desiring to inspect dairy farms under a performance-based inspection system should substitute the following language in 5:

   "5. Inspect each dairy farm as provided in Appendix P. Performance-Based Dairy Farm Inspection System."

7. Regulatory Agencies desiring to regulate cottage cheese, dry curd cottage cheese and reduced fat or low fat cottage cheese under the terms of this Ordinance should include the following in the Administrative Procedures of Item 5p:

   "Cottage cheese vats shall be located in a separate room, maintained free from insects and other vermin and kept in a clean condition. Provided, that in existing installations, cottage cheese vats may be located in the processing room when there is no evidence of overcrowding, excessive traffic, condensation or splash. Cottage cheese vats located in processing rooms shall be equipped with multi-service or single-service covers, which shall be kept in place at all times during the setting operation."

8. Regulatory Agencies desiring to regulate cottage cheese, dry curd cottage cheese and reduced fat or lowfat cottage cheese under the terms of this Ordinance should include the following in the Administrative Procedures of Item 7p:

   "Water supply outlets are provided immediately available to the cottage cheese vats. The hose for transport of water, for washing cottage cheese curd, shall be arranged in such a way as to preclude the possibility of the hose touching the floor or the product."

9. Regulatory Agencies desiring to regulate cottage cheese, dry curd cottage cheese and reduced fat or lowfat cottage cheese under the terms of this *Ordinance* should add the following:

"Provided, that cottage cheese, cheese dressings or cheese ingredients may be transported by other methods, which protect the product from contamination."

10. Regulatory Agencies desiring to regulate cottage cheese, dry curd cottage cheese and reduced fat or low fat cottage cheese under the terms of this *Ordinance* should add the following:

    "Provided that the rinsing of cottage cheese curd with sanitized and/or acidified potable water may be accepted by the Regulatory Agency."

11. Regulatory Agencies desiring to regulate the sale of cottage cheese, dry curd cottage cheese and reduced fat or lowfat cottage cheese under the terms of this *Ordinance* should add the following:

    "Provided, that cottage cheese, dry curd cottage cheese and reduced fat or lowfat cottage cheese may be transported in sealed containers in a protected, sanitary manner from one (1) milk plant to another for creaming and/or packaging. If suitable equipment is not available for the packaging of dry curd cottage cheese, other methods of packaging, which eliminate possible chances of contamination may be approved by the Regulatory Agency."

12. Regulatory Agencies desiring to regulate the sale of cottage cheese, dry curd cottage cheese and reduced fat or lowfat cottage cheese under the terms of this *Ordinance* should add the following to the Administrative Procedures of Item 18p:

    "If cottage cheese and dry curd cottage cheese are protected in a sanitary manner, they may be transported in sealed containers from one (1) milk plant to another for creaming and/or packaging."

13. Regulatory Agencies desiring to regulate the sale of cottage cheese, dry curd cottage cheese, and reduced fat or lowfat cottage cheese under the terms of this *Ordinance* should add the following to the indicated Administrative Procedures of Item 19p:

    1. "Provided further, that if suitable equipment is not available for capping cottage cheese, dry curd cottage cheese and reduced fat or lowfat cottage cheese, other methods of capping, which eliminate possible chances of contamination may be approved by the Regulatory Agency."
    4. "Closures for cottage cheese, dry curd cottage cheese and reduced fat or lowfat cottage cheese containers shall extend over the top edges of the container so as to protect the product from contamination during subsequent handling."
    5. "Provided, that this requirement shall not apply to cottage cheese, dry curd cottage cheese and reduced fat or lowfat cottage cheese container closures, when such closures are supplied in a totally enclosed package, or wrapped so as to protect the closures."

14. From Table 1, Regulatory Statistics, 5th Edition (June 1975) by Victor C. Beal, Jr., Programs Development and Application, Veterinary Services, APHIS: Animal Health Programs.

15. The term "accredited" in this Section means accredited by the USDA APHIS Veterinary Services.

16. A certified copy may be secured from the Food and Drug Administration, HFS-626, 5100 Paint Branch Parkway, College Park, MD 20740-3835.

APPENDIX A. ANIMAL DISEASE CONTROL

Copies of the *Uniform Methods and Rules; Bovine Tuberculosis Eradication, Uniform Methods and Rules for Establishment and Maintenance of Tuberculosis-Free Accredited Herds of Cattle, Modified Accredited Areas and Areas Accredited Free of Bovine Tuberculosis in the Domestic Bovine* and recommended *Brucellosis Eradication, Recommended Uniform Methods and Rules,* current at the time of adoption of this *Ordinance* may be obtained from your State Veterinarian or:

Veterinary Services
Animal and Plant Health Inspection Service
U. S. Department of Agriculture
Federal Center Building
Hyattsville, MD 20782

Or

Federal Area Veterinarian in Charge
VS, APHIS, USDA
Your State Capitol

It is recommended that Regulatory Agencies initiate and/or promote a mastitis control program. A well-planned and extended educational phase will encourage the support of producers and reduce the problems of enforcement.

The National Mastitis Council, Inc., 2820 Walton Commons West, Suite 131, Madison, WI 53718-6797, has studied a large number of existing control programs and has outlined a suggested flexible control program. In addition, review of the current knowledge of mastitis may be found in their publications: *Current Concepts of Bovine Mastitis* and the *Laboratory Handbook of Bovine Mastitis.*

Sanitarians may find the screening test a useful device for detecting abnormal milk. Sample screening methods, as well as somatic cell diagnosis and reduction programs are discussed in the references above as well as the Dairy Practices Council, 51 East Front Street, Suite 2, Keyport NJ 07735 publication: *The Field Person's Guide to Troubleshooting High Somatic Cell Counts*.

Regulatory action should not be based on the use of mastitis screening tests alone. Screening tests should be used as an adjunct to a complete program of mastitis control and milking-time inspections.

APPENDIX B. MILK SAMPLING, HAULING AND TRANSPORTATION

Milk sampling, hauling, and transport are integral parts of a modern dairy industry. Hauling, sampling and transport can be categorized into three (3) separate functions: Dairy or Industry Plant Samplers, Bulk Milk Hauling and Sampling and Milk Transport from one (1) milk handing facility to another.

I. MILK SAMPLING AND HAULING PROCEDURES

The dairy plant sampler is a person responsible for the collection of official samples for regulatory purposes outlined in Section 6 of this *Ordinance.* These persons are employees of the Regulatory Agency and are evaluated at least once each two (2) year period by a State Sampling Surveillance Officer (SSO) or a properly delegated Sampling Surveillance Regulatory Official. These individuals are evaluated using Form FDA 2399 - MILK SAMPLE COLLECTOR EVALUATION FORM, which is derived from the most current edition of *SMEDP*. (Refer to Appendix M.)

The bulk milk hauler/sampler is any person who collects official samples and may transport raw milk from a farm and/or raw milk products to or from a milk plant, receiving station or transfer station and has in their possession a permit from any State to sample such products. The bulk milk hauler/sampler occupies a unique position making this individual a critical factor in the current structure of milk marketing. As a weigher and sampler, they stand as the official, and frequently the only judge of milk volumes bought and sold. As a milk receiver, the operating habits directly affect the quality and safety of milk committed to their care. When the obligations include the collection and delivery of samples for laboratory analysis, the bulk milk hauler/sampler becomes a vital part of the quality control and regulatory programs affecting producer dairies. Section 3 of this *Ordinance* requires that Regulatory Agencies establish criteria for issuing permits to bulk milk hauler/samplers. These individuals are evaluated at least once each two (2) year period using Form FDA 2399a - MILK TANK TRUCK, HAULER REPORT AND SAMPLER EVALUATION FORM. (Refer to Appendix M.)

The industry plant sampler or bulk milk hauler/sampler is a person responsible for the collection of official samples for regulatory purposes at a milk plant, receiving station, or transfer station as outlined in Appendix N. These industry plant samplers are employees of the dairy plant, receiving station or transfer station and are evaluated at least once each two (2) year period by a SSO or a properly delegated Sampling Surveillance Regulatory Official. These industry plant samplers are evaluated using Form FDA 2399 - MILK SAMPLE COLLECTOR EVALUATION FORM, which is derived from the most current edition of *SMEDP*. (Refer to Appendix M.)

The milk tank truck driver is any person who transports raw or pasteurized milk or milk products to or from a milk plant, receiving station or transfer station. Any transportation of a direct farm pickup requires the milk tank truck driver to have responsibility for accompanying official samples.

The criteria for permitting these individuals should embrace at least the following:

TRAINING: To understand the importance of bulk milk collection and the techniques of sampling, including the use of an approved in-line sampler, all bulk milk hauler/samplers and industry plant samplers must be told why, and instructed how, in the proper procedures of

picking up milk and the collection of samples. The Regulatory Agency, dairy field person, route supervisors or any appropriate person whose techniques and practices are known to meet requirements can conduct this training. If the Regulatory Agency does not conduct the training, the training must be approved by or conducted under the supervision of the Regulatory Agency.
Training also frequently takes the form of classroom sessions in which the trainer describes pickup practices, demonstrates sampling and care of samples and affords the candidate the opportunity for guided practice in these techniques. Basic considerations of sanitation and personal cleanliness, which are important to the protection of milk quality, are discussed here. Officials administering weights and measures may participate in these programs and provide instruction in the measuring of milk and the keeping of required records.
An examination, approved by the Regulatory Agency, shall be administered at the conclusion of this program. Candidates failing the exam, a score of less than seventy percent (70%), shall be denied permits or licenses until indicated deficiencies are corrected. The examination should be adequate enough to determine if a bulk milk hauler/sampler is competent. The exam shall be composed of a minimum of twenty (20) total questions broken down into the following areas:

1. Six (6) questions relating to sanitation and personal cleanliness;
2. Six (6) questions relating to sampling and weighing procedures;
3. Four (4) questions relating to equipment, including proper use, care, cleaning, etc.; and
4. Four (4) questions relating to proper record keeping requirements.

Regularly scheduled refresher short courses by the regulatory agents and officials administering weights and measures would assist in maintaining and increasing the efficiency of the bulk milk hauler/sampler. Appropriate training should also be provided to industry plant samplers with regularly scheduled refresher short courses.

QUALIFICATIONS:
1. **Experience:** Experience may include a required period of observation during which the candidate accompanies a bulk milk hauler/sampler in the performance of their duties.
2. **Personal References:** Permit applications should be supported by suitable references testifying to the character and integrity of the candidate.

EVALUATION OF BULK MILK HAULER/SAMPLER PROCEDURES: The routine inspection of bulk milk hauling/sampling procedures provides the Regulatory Agency with an opportunity to check both the condition of the bulk milk hauler/sampler's equipment and the degree of conformance with required practices.
The bulk milk hauler/sampler's technique is best determined when the regulatory agent is able to observe the bulk milk hauler/sampler at one (1) or more farms. Each bulk milk hauler/sampler must be inspected by the Regulatory Agency prior to the issuance of a permit and at least once every twenty-four (24) months thereafter as referenced in Section 5 of this *Ordinance*. The bulk milk hauler/sampler must hold a valid permit prior to the collection of official samples. States may use inspections from any Regulatory Agency as a means of maintaining record requirements and enforcement.
The procedures for sampling and the care of samples should be in compliance with the current edition of *SMEDP*.

Specific Items to be evaluated in determining compliance include:

1. **Personal Appearance:** Bulk milk hauler/samplers shall practice good hygiene; shall maintain a neat and clean appearance; and not use tobacco in the milkhouse.
2. **Equipment Requirements:**
   a. Sample rack and compartment to hold all samples collected.
   b. Refrigerant to hold temperature of milk samples between 0ºC- 4.4ºC (32ºF- 40°F).
   c. Sample dipper or other sampling devices of sanitary design approved by the Regulatory Agency; clean and in good repair.
   d. Sterile sample bags, tubes or bottles; properly stored.
   e. Calibrated pocket thermometer; certified for accuracy every six (6) months; accuracy ± 1°C (2°F).
   f. Approved sanitizing agent and sample dipper container.
   g. Watch for timing milk agitation.
   h. Applicable sanitizer test kit.
3. **Milk Quality Checks:**
   a. Examine the milk by sight and smell for any off odor or any other abnormalities that would class the milk as not being acceptable. Reject if necessary.
   b. Wash hands thoroughly and dry with a clean single-service towel or acceptable air dryer immediately prior to measuring and/or sampling the milk.
   c. Record milk temperature, time, date of pick-up and bulk milk hauler/sampler's name and license or permit number on the farm weight ticket; monthly the hauler/sampler shall check the accuracy of the thermometer on each bulk tank and record results when used as a test thermometer. Accuracy of required recording thermometers shall be checked monthly against a standardized thermometer and recorded. Pocket thermometer must be sanitized before use.
4. **Milk Measurements:**
   a. The measurement of the milk shall be taken before agitation. If the agitator is running upon arrival at the milkhouse, the measurement can be taken only after the surface of the milk has been quiescent.
   b. Carefully insert the measuring rod, after it has been wiped dry with a single-service towel, into the tank. Repeat this procedure until two (2) identical measurements are taken. Record measurements on the farm weight ticket.
   c. Do not contaminate the milk during measurement.
5. **Universal Sampling System:** When bulk milk hauler/samplers collect raw milk samples, the "universal sampling system" shall be employed, whereby samples are collected every time milk is picked up at the farm. This system permits the Regulatory Agency, at its discretion, at any given time and without notification to the industry, to analyze samples collected by the bulk milk hauler/sampler. The use of the "universal sample" puts more validity and faith in samples collected by industry personnel. The following are sampling procedures:
   a. Pick-up and handling practices are conducted to prevent contamination of milk contact surfaces.
   b. The milk must be agitated a sufficient time to obtain a homogeneous blend. Follow the State and/or manufacturer's guidelines.
   c. While the tank is being agitated, bring the sample container, dipper, dipper container and sanitizing agent for the outlet valve, or single-service sampling tubes into the milkhouse

aseptically. Remove the cap from the tank outlet valve and examine for milk deposits or foreign matter and then sanitize if necessary. Protect the hose cap from contamination when removing it from the transfer hose and during storage.

d. The sample may only be collected after the milk has been properly agitated. Remove the dipper or sampling device from the sanitizing solution or sterile container and rinse at least twice in the milk.

e. Collect a representative sample or samples from the bulk tank. When transferring milk from the sampling equipment, caution should be used to assure that no milk is spilled back into the tank. Do not fill the sampling container more than ¾ full. Close the cover on the sample container.

f. The sample dipper shall be rinsed free of milk and placed in its carrying container.

g. Close the cover or lid of the bulk tank.

h. The sample must be identified with the producer's number at the point of collection.

i. A temperature control sample must be taken at the first stop of each load. This sample must be labeled with time, date, temperature and producer and bulk milk hauler/sampler identification.

j. Place the sample or samples immediately into the sample storage case.

6. **Pump Out Procedures:**

a. Once the measurement and sampling procedures are completed, with the agitator still running, open the outlet valve and start the pump. Turn off the agitator when the level of milk is below the level that will cause over-agitation.

b. When the milk has been removed from the tank, disconnect the hose from the outlet valve and cap the hose.

c. Observe the inside surfaces of the bulk tank for foreign matter or extraneous material and record any objectionable observations on the farm weight ticket.

d. With the outlet valve open, thoroughly rinse the entire inside surface of the tank with warm water.

7. **Sampling Responsibilities:**

a. All sample containers and single-service sampling tubes used for sampling shall comply with all the requirements that are in the current edition of *SMEDP*. Samples shall be cooled to and held between 0°C (32°F) and 4.4°C (40°F) during transit to the laboratory.

b. Means shall be provided to properly protect the samples in the sample case. Keep refrigerant at an acceptable level.

c. Racks must be provided so that the samples are properly cooled in an ice bath.

d. Adequate insulation of the sample container box or ice chest shall be provided to maintain the proper temperature of the samples throughout the year.

The SSO conducts periodic evaluations of sampling procedures. This program will promote uniformity and compliance of sample collection procedures.

II. REQUIREMENTS FOR USING AN APPROVED IN-LINE SAMPLER

A protocol specific to each milk producer who direct loads milk tank trucks (through by-passing the use of farm bulk milk tanks or silos) while utilizing an approved in-line sampler shall be developed by the Regulatory Agency in cooperation with the sampling equipment manufacturer, the milk buyer, the milk producer and FDA. As a minimum, the protocol should include the

following:

1. A description of how the milk sample is to be collected, identified, handled and stored.
2. A description of the means used to refrigerate the sample collection device and milk sample collection container throughout the milk sample collection period.
3. A means to monitor the sampler device temperature and milk sample temperature, and the milk temperature.
4. A description of how and when the sampler is to be cleaned and sanitized, if not of a single use design.
5. A listing of the licensed bulk milk hauler/samplers who have been trained to maintain, operate, clean and sanitize the sample collection device as well as to collect, identify, handle and store the milk sample.
6. A description of the method and means that will be used to determine weight of the milk on the milk tank truck.

III. MILK TANK TRUCK PERMITTING AND INSPECTION

Milk tank trucks shall be evaluated annually using the requirements established in Sections 3 and 5 of this *Ordinance* using Form FDA 2399b - MILK TANK TRUCK INSPECTION FORM. (Refer to Appendix M.)

PERMITTING: Each milk tank truck shall bear a permit for the purpose of transporting milk and milk products. (Refer to Section 3 of this *Ordinance.*) The permit shall be issued to the owner of each milk tank truck by an authorized Regulatory Agency. The permit identification and State issuing the permit shall be displayed on the milk tank truck. It is recommended that this permit be renewed each year pending satisfactory completion of an inspection as outlined in the following **INSPECTION** Section.

RECIPROCITY: Each permit shall be recognized by other Regulatory Agencies under the reciprocal agreements of the NCIMS and supporting documents of this *Ordinance.* A milk tank truck need only bear one (1) permit from an appropriate Regulatory Agency. A milk tank truck may be inspected at any time when deemed appropriate by the Regulatory Agency. Absent proof of a current permit and current inspection, when the milk tank truck is inspected by a Regulatory Agency other than the permitting agency, an inspection fee may be charged to the owner of the milk tank truck. This is necessary to allow a milk tank truck to pickup and deliver in several jurisdictions without the need for more than one (1) permit. A Regulatory Agency may have the option of inspecting any milk tank truck at any time when milk and milk products are transported in or out of a particular jurisdiction. It is the responsibility of the milk tank truck owner or operator to maintain a current proof of inspection to avoid a re-inspection fee. Disputes concerning reciprocal agreements on milk tank truck inspection between Regulatory Agencies may be tendered to the Chair of the NCIMS or the Chair's designee for resolution.

INSPECTION: Each milk tank truck shall be inspected at least once each year by a Regulatory Agency. (Refer to Section 5 of this *Ordinance.*) A copy of the current inspection report shall accompany the milk tank truck at all times, or the tank shall bear an affixed label, which

identifies the Regulatory Agency with the month and year of inspection. The affixed label shall be located near the tank outlet valve.

When significant defects or violations are encountered by a Regulatory Agency, a copy of the report shall be forwarded to the permitting agency and also carried on the milk tank truck until the violations are corrected.

Milk tank truck inspections shall be conducted in a suitable location, i.e., a dairy plant, receiving or transfer station or milk tank truck cleaning facility. Inspections may not require entry of confined spaces as defined by the Occupational Safety and Health Administration (OSHA) standards. When significant cleaning, construction or repair defects are noted the milk tank truck shall be removed from service until proper confined entry safety requirements can be satisfied to determine cleaning or repairs needed. Cleaning or repairs may be verified by a qualified individual to the satisfaction of the Regulatory Agency.

Inspection reports completed by Regulatory Agencies other than the permitting agency shall be forwarded to the permitting agency for verification of annual inspection as required in the **PERMITTING** Section of this Appendix. The permitting agency may use these reports to satisfy permit requirements.

MILK TANK TRUCK STANDARDS: All Items of the MILK TANK TRUCK INSPECTION FORM fall into the categories of "Compliance", "Non-Compliance" or "Not Applicable" (NA) as determined during the inspection. The following Items relate to Form FDA 2399b: (Refer to Appendix M.)

1. **Samples and Sampling Equipment:** (When provided)
   a. Sample containers shall be stored to preclude contamination.
   b. The sample box shall be in good repair and kept clean.
   c. Sample transfer instrument shall be cleaned and sanitized to insure that proper samples are collected.
   d. The sample transfer instrument container is provided and adequate means for maintaining sanitizer solutions is on hand.
   e. The samples are properly stored to preclude contamination.
   f. The sample storage compartment shall be clean.
   g. Samples are maintained at an acceptable temperature 0ºC-4.4ºC (32ºF-40ºF) and a temperature control sample is provided.
   h. An approved thermometer is available for use by the sampler. The accuracy of the thermometer is checked each six (6) months with the results and date recorded on the carrying case.
2. **Product Temperature 7º C (45ºF) or Less:**
   a. The product temperature must meet all the requirements of Section 7, Items 18r and 17p-Cooling of Milk, of this *Ordinance.*
   b. Product that remains in external transfer systems that exceeds 7ºC (45ºF) is discarded. This includes pumps, hoses, air elimination equipment or metering systems.
3. **Equipment Construction, Cleaning, Sanitizing and Repair:** Items A through K on Form FDA 2359b shall be evaluated according to the following criteria:
   a. Construction and Repair Requirements:
      (1) The milk tank truck and all appurtenances shall meet applicable requirements of Section 7, Item 10p-Sanitary Piping and Item 11p-Construction and Repair of Containers

and Equipment, of this *Ordinance*. Equipment manufactured in conformity with 3-A Sanitary Standards, complies with sanitary design and construction requirements of this *Ordinance.*

(2) The interior of the milk tank trucks shall be constructed of smooth, non-absorbent, corrosion-resistant, non-toxic material; and it shall be maintained in good repair.

(3) The appurtenances of the milk tank truck includes hoses, pumps and fittings, shall be constructed of smooth, non-toxic cleanable material; and shall be maintained in good repair. Where flexibility is required, the fluid transfer system shall be free draining and so supported to maintain uniform slope and alignment. They shall be easily disassembled and accessible for inspection.

(4) The cabinet portion(s) of the tank, used for the storage of appurtenances and sampling equipment, where applicable, shall be constructed to preclude contamination by dust, dirt; be clean; and in good repair.

(5) The milk tank truck dome lid assembly, vent and dust cover shall be designed to protect the tank and milk from contamination.

b. Cleaning and Sanitizing Requirements:

(1) The milk tank truck and all of its appurtenances shall be cleaned and sanitized in accordance with applicable requirements of Section 7, Item 12p-Cleaning and Sanitizing of Containers and Equipment, of this *Ordinance.*

(2) The milk tank truck shall be cleaned and sanitized prior to its first use. When the time elapsed after cleaning and sanitizing, and before its first use, exceeds ninety-six (96) hours the tank must be re-sanitized.

(3) It is allowable to pickup multiple loads continuously within a twenty-four (24) hour period, provided the milk tank truck is washed after each day's used.

4. **Exterior Condition of Tank:** The exterior of the milk tank truck is properly constructed and in good repair. Defects and damage that would adversely affect products contained in the milk tank truck are pointed out on the MILK TANK TRUCK INSPECTION FORM and corrective actions are prescribed. Cleanliness of the milk tank truck exterior is evaluated with consideration for existing weather and environmental conditions.

5. **Wash and Sanitize Record:**

a. The bulk milk hauler/sampler shall be responsible for assuring that the milk tank truck has been properly cleaned and sanitized at a permitted milk plant, receiving station, transfer station, or milk tank truck cleaning facility. A milk tank truck without proper cleaning and sanitizing documentation shall not be loaded or unloaded until the proper cleaning and sanitization can be verified.

b. A cleaning and sanitizing tag shall be affixed to the outlet valve of the milk tank truck until the milk tank truck is next washed and sanitized. When the milk tank truck is washed and sanitized, the previous cleaning and sanitizing tag shall be removed and stored at the location where the milk tank truck was washed for a period of not less than fifteen (15) days.

c. The following information shall be recorded on the cleaning and sanitization tag:

(1) Identification of the milk tank truck.

(2) Date and time of day the milk tank truck was cleaned and sanitized.

(3) Location where the milk tank truck was cleaned and sanitized.

(4) Signature or initials of the person who cleaned and sanitized the milk tank truck.

d. The maintenance of all information on the cleaning and sanitizing tag shall be the responsibility of the bulk milk hauler/sampler or the milk tank truck operator.

e. State will submit to the NCIMS Executive Secretary an updated list of all currently permitted non-IMS listed milk tank truck cleaning facilities. The list is to be submitted for publication on the NCIMS or other easily accessible web site.

6. **Location of Last Cleaning/Sanitizing:**

The location of the last cleaning and sanitizing shall be verified by the Regulatory Agency during any milk tank truck inspection and recorded on the Milk Tank Truck Inspection Form.

7. **Labeling:** The maintenance of all pertinent information on all shipping documents, shipping invoices, bills of lading or weight tickets is the responsibility of the bulk milk hauler/sampler. A milk tank truck transporting raw, heat-treated or pasteurized milk and milk products to a milk plant from another milk plant, receiving station or transfer station is required to be marked with the name and address of the milk plant or hauler and the milk tank truck shall be under a proper seal. All shipping documents must contain the following information as outlined in Section 4-Labeling, of this *Ordinance*:

a. Shipper's name, address and permit number. Each milk tank truck load of milk shall include the IMS BTU identification number(s) or the IMS Listed Milk Plant Number, for farm groups listed with a milk plant, on the farm weight ticket or manifest;
b. Permit identification of the hauler, if not an employee of the shipper;
c. Point of origin of shipment;
d. Milk tank truck identification number;
e. Name of product;
f. Weight of product;
g. Temperature of product when loaded;
h. Date of shipment;
i. Name of supervising Regulatory Agency at the point of origin of shipment;
j. Whether the contents are raw, pasteurized, or in the case of cream, lowfat or skim milk, whether it has been heat-treated;
k. Seal number on inlet, outlet, wash connections and vents; and
l. Grade of product.

All information contained on the above described documents shall be verified by the Regulatory Agency and recorded on the appropriate inspection sheet for any bulk milk tank trucks under inspection.

8. **Vehicle and Milk Tank Truck Properly Identified:** It shall be the responsibility of the milk tank truck owner or operator to insure the proper and legible identification of the milk tank truck(s) in their possession.

9. **Previous Inspection Sheet or Affixed Label Available:** When a milk tank truck transports milk and milk products from one (1) regulatory jurisdiction to another it is not necessary to inspect each milk tank truck upon each arrival. Milk tank truck owners and operators shall carry proof of annual inspection from a recognized Regulatory Agency. A milk tank truck may be inspected at any time or at the discretion of any Regulatory Agency responsible for the milk supply.

10. **Sample Chain-of-Custody:** When samples for official laboratory analysis are transported by any individual where the sample chain-of-custody must be established, the driver may be required to carry a valid permit or shall be evaluated biennially for the collection of samples for official laboratory analysis. The criteria from Section I-Evaluation of Bulk Milk Hauler/ Sampler Procedures, Item 7-Sampling Responsibilities of this Appendix will be used as the basis for the

evaluation. As an alternative, a sample case sealed as required by the Regulatory Agency may be accepted.

APPENDIX C. DAIRY FARM CONSTRUCTION STANDARDS AND MILK PRODUCTION

I. TOILET AND SEWAGE DISPOSAL FACILITIES

FLUSH TOILETS

Flush toilets are preferable to pit privies, earth closets or chemical toilets at both dairy farms and milk plants. Their installation shall conform to the Local or State plumbing regulations. Toilets shall be located in a well-lighted and well-ventilated room. Fixtures shall be protected against freezing. The following shall be considered defects in flush-toilet installations:

1. Insufficient water pressure or volume;
2. Leaky plumbing;
3. Clogged sewers, as evidenced by overflowing toilet bowl;
4. Broken tile lines or clogged disposal field;
5. Access of dairy lactating animals to the effluent below the sewer or disposal-field discharge;
6. Effluent coming to the surface of the ground in the absorption field;
7. Toilet room floor soaked with urine or other discharges;
8. Offensive odors or other evidence of lack of cleanliness; or
9. Location of soil lines, septic tank, absorption field or leaching pit closer to the source of water supply than the limits indicated in Appendix D.

SEPTIC TANKS

Disposal of the wastes from toilets should preferably be into a sanitary-sewer system. Where such systems are not available to a dairy farm or milk plant, the minimum satisfactory method should include treatment in a septic tank, with the effluent discharged into the soil. Where soil of satisfactory permeability is not available, the effluent shall be disposed of in accordance with the rules of the Local or State Health Authority. It is preferable to treat floor drainage, wastes from washing of utensils, etc., in separate systems. When such wastes are combined with toilet wastes in the septic tank system, careful consideration must be given to the expected flow in the design of both the septic tank and the leaching system.

The septic tank shall be located a safe distance from water sources as determined by consideration of the criteria indicated in Appendix D. The Regulatory Agency shall review and approve proposed installations prior to the initiation of construction. The location should permit easy access for inspection and cleaning. The site should be chosen to make the largest possible area available for the disposal field.

The size of the septic tank should be based on the average daily flow of sewage, a retention period of approximately twenty-four (24) hours and adequate sludge storage. The minimum liquid capacity of a septic tank should be 3,000 liters (750 gallons). The outlet should be baffled to prevent scum from passing out with the overflow. The septic tank cover or slab should be watertight, designed to be insect and rodent proof and to withstand any load likely to be placed upon it. Each tank should have a manhole for each compartment, when it is provided with a solid-slab cover. The manhole covering should be made watertight. Septic tanks should be constructed of materials that are not subject to excessive corrosion or deterioration.

DISPOSAL FIELDS FOR SEPTIC TANKS

A distribution box is considered desirable in every field system. The design of the field should be based on the expected sewage flow, the actual absorptive quality of the soil and the total bottom area of the trenches. Tile or perforated pipe designed for this use, of not less than 10 millimeters (4 inches) diameter, is recommended for field laterals. Laterals should be separated by at least three (3) times the width of the trenches, with a minimum of 2 meters (6 feet).

Trenches should be filled with broken stone or screened gravel, from a depth of at least 15 centimeters (6 inches) below the distributing pipes, to a level at least 5 centimeters (2 inches) above the top of the lines. When drain tile is used, joints should be open about 5 millimeters (¼ inch), and the openings protected by tarpaper strips over the top and sides. The aggregate should be protected from loose backfill by means of a separating strip of untreated building paper or similar material. Under no condition should a field with less than 13.9 square meters (150 square feet) of effective absorption area (30 meters of 46 centimeters (100 linear feet of 18-inch) trench be provided for any individual unit. The maximum length of individual lines should not exceed 30 meters (100 feet). The slope of the field's lateral lines may vary from 5 centimeters (2 inches) to 10 centimeters (4 inches) per 30 meters (100 feet), but should never exceed 15 centimeters (6 inches) per 30 meters (100 feet). It is desirable to have the tile lines within 46 centimeters (18 inches) of the finished grade; however, the total depth of the lateral trenches should never average more than 91 centimeters (36 inches).

In some instances seepage pits may provide a more satisfactory means of disposal of effluent. Walls should be permeable and the liquid capacity should be not less than that of the septic tank. Total wall area should be proportionate to absorptive quality of the soil and to expected sewage flow.

Information as to methods of making percolation tests to determine absorptive quality of the soil may be obtained from Local and/or State Health Departments. From the same sources, advice may be obtained as to trench areas needed for various numbers of users, in relation to observed percolation rates. In view of their close knowledge of local conditions, it is recommended that such assistance be requested before an absorption system is constructed.

EARTH-PIT PRIVY

The earth-pit privy offers the most suitable type of excreta disposal unit for the dairy farm where water carriage systems of disposal cannot be provided. While there are many different designs in use, the basic elements are the same in all cases.

1. **General:** The earth pit should be of such capacity that it may be used for several years without requiring the privy to be moved. Excreta and toilet paper are deposited directly into the pit. Aerobic bacteria break down the complex organic material into more or less inert material. Insects, animals and surface water must be prevented from entering the pit. It is essential that the privy be designed and constructed so that the pit can be kept fly tight.

2. **Location:** The location of the privy shall take into account the need to prevent the contamination of water supplies. The criteria of Appendix D. shall be applied. On sloping ground, it shall be located at a lower elevation than the water supply. On level ground, the area around both the privy and water supply should be mounded with earth. If the installation of an

earth-pit privy will endanger the safety of the water supply, other methods of disposal must be used.

The site should be accessible to all potential users. Consideration should be given to the direction of prevailing winds to reduce fly and odor nuisances. The privy pit should not encroach within 2 meters (6 feet) of any building line or fence, in order to allow proper construction and maintenance.

3. **Pit, Sill, and Mound:** A minimum pit capacity of 4.6 cubic meters (50 cubic feet) is recommended. The pit should be tightly sheathed for a meter or several feet below the earth surface, but openings in the sheathing are desirable below this depth. The sheathing should extend from 25-50 millimeters (1-2 inches) above the natural ground surface, to provide space between the sill and the upper portion of the sheathing, so that the floor and building will not rest on the sheathing. A reinforced concrete sill should be provided for support of the floor and superstructure. The sill should be placed on firm, undisturbed earth.

An earth mound, at least equal in thickness to the concrete sill, should be constructed with a level area 46 millimeters (18 inches) away from the sill in all directions.

4. **Floor and Riser:** Impervious materials, such as concrete, are believed to be most suitable for the floor and riser. Because privy units are commonly used as urinals, the use of impervious materials for risers is desirable in the interest of cleanliness. In cold climates, wood treated with a preservative, such as creosote, has been found to be durable and to reduce the problem of condensation. Therefore, in some sections of the country, wood may be used if approved by the Local or State Health Authority.

5. **Seat and Lid:** Both seat and lid should be hinged to permit raising. Material used in construction should be light in weight, but durable. Seats should be comfortable. Lids shall be self-closing. Two (2) objections to self-closing seat lids are: Discomfort from the lid resting on the upper portion of the user's back and contact of the oftentimes soiled or frost-covered bottom surface of the lid with the user's clothing. A seat lid has been devised which overcomes these objections. This lid is raised to a vertical position by lifting it from the rear, so that the top surface of the lid is against the user, rather than the bottom surface that is normally exposed to the pit.

6. **Vent:** Venting practices differ in many parts of the United States, because of differences in climatic conditions. In some States, particularly those in the South, vents have been omitted entirely and results from this practice appear to be satisfactory. Vents may pass vertically from either the pit or the riser, through the roof or directly through the wall near the floor. The vertical vent from pit or riser may lead to a horizontal vent passing through both walls or diagonally across a corner of the building.

In all cases, vents are screened. Galvanized, steel-wire screens dipped in paint, copper screens and bronze screens are used. Nearly all designs employ a screen with 6 (six) meshes to the centimeter (sixteen (16) meshes to the inch). Hardware cloth is used to cover the outside entrance to vents to prevent entrance of large objects that would clog the vent.

It is stated by some authorities that venting serves no useful purpose and that vents should be eliminated from earth-pit privies. Satisfactory recommendations with respect to vents can be made only after certain technical problems have been solved. The most important of these is the moisture condensation problem due to the temperature difference between the pit and the superstructure. The use of a cold wall, to condense moisture within the pit, has been suggested. In view of the uncertain value of venting, no recommendations are offered.

7. **Superstructure:** Privy structures are standardized to some extent. The majority are 1.2 meters by 1.2 meters (4 x 4 feet) in plan, with a height of 2 meters (6.5 feet) in front, and 1.8 meters (5.5 feet) at the rear. A roof with a 1-to-4 slope is commonly used. The building should be constructed of substantial material, painted for resistance to weather and fastened solidly to the floor slab. Proper roof overhang should be provided to dispatch rainwater from the roof away from the mound.

The roof should be constructed of watertight materials, such as wood, composition shingles or metal. Achieving ventilation of the building by omitting siding beneath the roof is common, except in cold climates, where the siding is usually perforated. Windows are sometimes used in the northern latitudes. Provision of coat hooks is desirable.

8. **Defects in Earth-Pit Privies:** The following shall be considered defects in pit-toilet installations:

a. Evidence of caving around the edges of the pit;
b. Signs of overflow, or other evidence that the pit is full;
c. Seat covers broken open or not self-closing;
d. Broken, perforated or unscreened vent pipe;
e. Uncleanliness of any kind in the toilet building;
f. Toilet room opening directly into milkhouse; and
g. Evidence of light entering the pit, except through the seat when the seat cover is raised.

MASONRY-VAULT PRIVY

A masonry-vault privy is essentially a pit privy in which the pit is lined with impervious materials and in which provision is made for the removal of excreta.

1. **Function:** Masonry vaults are used chiefly where the ground water table is close to the ground surface, or where it is necessary to prevent contamination of nearby water courses, wells and springs. They are also recommended for use in limestone formations to prevent contamination of water streams in the solution channels of the limestone. This type of disposal unit is satisfactory only where adequate maintenance and servicing are assured.

2. **Construction:** Masonry vaults may be constructed of brick, stone or concrete, with the latter preferred. The vault must be watertight to keep out ground water and to prevent leakage of the vault's contents. A readily accessible cleanout door is necessary. It shall be constructed to prevent access of insects, animals and surface water to the vault's contents. The floor of the superstructure, which forms a partial covering for the vault, must be impervious. Concrete is recommended.

CHEMICAL TOILET

In some areas where pit toilets might menace water supplies, where a sufficient volume of water for the operation of flush toilets is not available and where there is no prohibitive statute or ordinance, the chemical toilet may be accepted. Provided that it:

1. Has a receiving tank of acid resisting material with an opening easily accessible for cleaning;
2. Has a bowl, of nonabsorbent materials, sufficiently elevated above the receiving basin to prevent splashing the user;

3. Has the tank and bowl vented with at least a 7.6 centimeters (3 inches) screened pipe, preferably of cast iron, extending at least 60 centimeters (2 feet) above the roof line;
4. Has the tank charged, at proper intervals, with chemicals of a bactericidal nature and concentration;
5. Is placed in a well-lighted and well-ventilated room which does not open directly into the milkhouse; and
6. Has an effective method of final disposal, including burial, or a leaching vat or a cesspool where it will not endanger any water supply.

1. **Type:** Chemical toilets differ from privies, in that they are commonly placed inside the dwelling, whereas privies are generally located apart from the dwelling. There are, in general, two (2) types of chemical toilets:
   a. The commode type, in which a pail containing a chemical solution is placed immediately below the seat; and
   b. The tank type, in which a metal tank holding the chemical solution is placed in the ground directly beneath the seat. A pipe or conduit connects the riser with the tank. Tanks are usually cleaned by draining to a subsurface seepage pit.
2. **Function:** Toilets of this type are predominant in cold climates, where it is found desirable to have toilet facilities in or near the home, and where running water is not available for flush toilets.
3. **Chemicals:** Sodium hydroxide is commonly used to prepare the caustic solution for either commode or tank type chemical toilets. The chemical is dissolved in water and placed in the receptacle. The purpose of the chemical solution is to emulsify the fecal matter and paper and to liquefy the contents. In order to accomplish this action, the chemical solution must be maintained at proper strength and the mixture must be agitated each time the toilet is used. Odors are produced chiefly by the liberation of ammonia, when the caustic solution is weak, or when mixing by agitation is not carried out.
Difficulties are encountered when the caustic solution becomes diluted and fails to emulsify the fecal matter. When this occurs, the chemical solution breaks down, due to absorption of carbon dioxide from the air, and the solution ceases to be caustic. The decomposition of fecal matter produces foul odors.
4. **Sludge Disposal:** Disposal of the resultant mixture is a disagreeable task. In the case of small commode types, the usual method of disposal is burial in the earth. Tank units are usually so constructed that the tank is emptied into a seepage pit. When emulsification is not complete, particles of paper clog the seepage pit requiring corrective measures. Because of fundamental differences in design, chemical toilets resemble other types of privies only in the seat construction and manner of venting. Usually, risers or stools manufactured commercially are used.
Chemical toilets shall be used only where there is assurance of constant maintenance and where safe disposal of the contents is assured. Neither sludge nor liquid effluent from chemical toilet tanks shall be discharged to a sewage system in which treatment processes are involved. Otherwise, the chemical constituents of the sludge or liquid effluent may seriously interfere with the biological action upon which such treatment processes depend.
5. **Defects:** The following shall be considered defects in a chemical toilet installation:
   a. Violation of any of the above requirements;

b. Disagreeable odors indicating to-infrequent charging with chemicals or inadequate concentration of chemicals in the charge;

c. Evidence of improper disposal of the tank contents; and

d. Lack of cleanliness in the toilet compartment and room.

CONSTRUCTION PLANS

Detailed construction drawings for septic tanks, pit privies, masonry-vault privies and chemical toilets complying with State regulations may be secured from the Local and State Health Authority.

II. GUIDELINE #45 - GRAVITY FLOW GUTTERS FOR MANURE REMOVAL IN MILKING BARNS

Published by the Dairy Practices Council

The gravity flow gutter concept for manure removal comes from Europe. Manure falls into a deep gutter in the barn floor and then flows by gravity to a cross channel or outlet pipe to storage. A low (8-20 centimeters) (3"-8") dam retains a lubricating liquid layer over which the manure flows (Fig. 1). After one (1) to three (3) weeks in a newly started gutter, the manure surface forms an incline of 1-3% above the dam. Then the manure moves continuously over the lip. The gutter must be deep enough to contain manure sloped at this shallow angle.

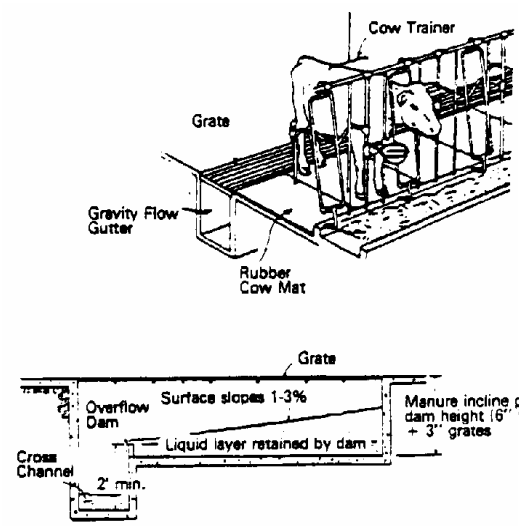

Figure 1. Side Cross Section of a Gravity Flow Gutter

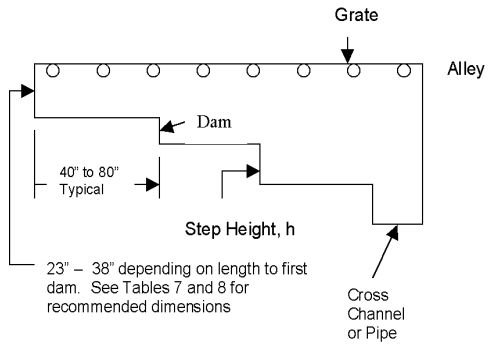

Figure 2. Stepped Gravity Flow Gutter

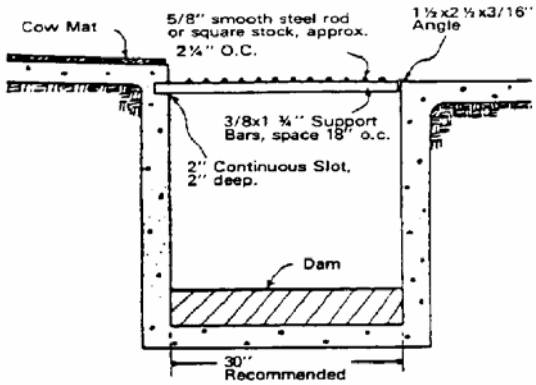

Figure 3. Cross Section of a Typical Gutter and Grate

Because manure moves by its own weight, no mechanical equipment is required to remove it from the barn. Generally the cost of the gutter and cover grates is less than the cost of installing, operating and maintaining a mechanical cleaner.

This system is neither a flush gutter, where 115-225 liters (30-60 gallons) of water per cow is needed to remove manure from the gutter, nor is it an under-barn storage that is open to the barn. Rather, it is a conveying channel that carries the manure from behind the cow to the outside storage. The top surface of the slurry has been recorded to move 3 meters (10 feet) per hour.

CONSTRUCTION

1. **Gutter Depth:** Gutter depth depends on the length of the gutter and the angle of incline of the manure surface. Design in this guideline assumes the manure surface forms a 3% slope. Most diets form wetter manure, and with no bedding the slope may be 1% less. The bottom should be level so the dam will hold a uniform liquid layer. The maximum depth of the gutter at

the end opposite the discharge shall not exceed 138 centimeters (54 inches). In addition, the outlet shall be clear of obstructions.
The depth includes an allowance for a 15 centimeters (6 inches) dam and 8 centimeters (3 inches) deep grates.
Adding steps may decrease the maximum manure depth. The depth from the bottom of each dam to the bottom of the next level varies depending on the distance between steps. (Refer to Figure 2)

Table 6. Slot Size vs. Cattle Age

Age (Months)	1-6	6-12	12-24	Over 24
Slot Size (in.)	1 – 1 ⅛	1⅛ – 1⅜	1⅜ – 1⅝	1 ½ - 1⅝

2. **Width of Gutters:** The bottom of the gutter shall not exceed 91 centimeters (36 inches) in width. A 76 centimeters (30 inches) wide gutter is recommended. The gutter opening may be narrowed to 50-60 centimeters (20-24 inches) in order to reduce the size and costs of grates.
3. **Overflow Dam:** The dam retains a lubricating liquid layer over the channel, which is essential to maintain flow. Typical heights range between 8 and 20 centimeters (3 and 8 inches). Dams, if removable, would facilitate total cleanout, when and if necessary. Concrete, a steel plate, or a plank may be used to construct the dam. Caulking may be needed to seal the dam.

Table 7. Gravity Flow Gutter Depth vs. Length for Manure from Lactating Animals

Length		**Depth**	
Meters	Feet	Cm.	Inches
12	40	58	12
18	60	78	18
24	80	96	24
30	100	114	30
36	120	132	36

4. **Length**: A 70 meters (226 feet) long gutter has worked, but typical distances between dams range from 12 to 24 meters (40 to 80 feet). Longer channels must be deeper; hence, they may cost more because they require more concrete and stronger forms.

Table 8. Step Height vs. Length for Stepped Gravity Flow Gutters		
Step Height		
Length Between Dams	For 1.5% Manure Incline	For 3% Manure Incline
40’	7”	14”
50’	9”	18”
60’	11”	22”
70’	13”	25”
80’	15”	29”

5. **Grates:** Commercial steel grates for stall barns and concrete slats for freestall barns are generally available. Table 7 suggests slot widths. Grates for stall barns are made from round or flat steel stock.

6. **Cross Channel:** The cross channel may be constructed like the gutter. At least a 60 centimeters (2 feet) drop from the top of the dam to the bottom of the cross channel is suggested to prevent backup of manure into it. The channel may be extended directly to storage. The slurry should enter the bottom; to prevent storage gases and cold air from returning up the channel. Channel depth, below grade, should be sufficient to prevent freezing.

Gravity flow via a concrete, steel or plastic pipe may also be used to transfer manure to the bottom of the outside storage. Pipe as small as 38 centimeters (15 inches) diameter has been used successfully. However, 60 centimeters (24 inches) diameter pipe is recommended.

Do not empty channels into large sumps or pits within, or having direct openings into the barn. These storages will produce gas and odors that will be drawn into the barn through the ventilation systems.

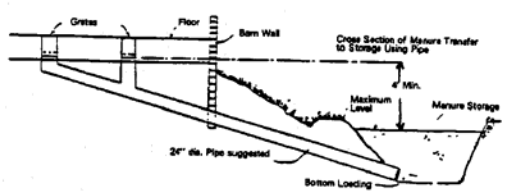

Figure 4. Manure Transfer to Storage

MANAGEMENT

1. **Flooding of Gutters:** Prior to stocking the building, fill the gutters with 8-15 centimeters (3-6 inches) of water to start the lubrication layer.

2. **Bedding Usage**: The type and amount of bedding used is important to successful operation. Up to .5 kilograms (1 pound) per lactating animal per day of sawdust, fine cut shavings or peanut hulls still allows the system to work. Some have worked with long straw bedding, but it is not recommended. More bedding or long straw increases manure stiffness and may clog the gutter.

Lactating animal mats allow minimum bedding use. Sometimes water may need to be added, depending upon the feed ration and amount of bedding used.

3. **Wastage and Deposits:** Keep feed and hay out of the gutter. Barn lime and soil brought in from outside may settle to the bottom. For this reason, the overflow dam, on some gutters, is removable for clean out. Buildup of solids has not been a problem under normal management, although the gutter will need cleaning if it has not been used for some time. Watch for islands of solids, especially where excess bedding or feed builds up. Cut these islands free of the walls to keep them flowing.

4. **Cleaning Grates:** Grates need cleaning at least weekly and, preferably, daily. A broom connected to a hose makes the job easy.

5. **Flies and Odors**: Flies have caused little or no problems. Biodegradable oil such as mineral oil may be sprayed on the manure surface to control them. Little or no odors have been observed in barns with good ventilation. There is no need to install fans to ventilate the gutters.

III. CONVALESCENT (MATERNITY) PENS IN MILKING BARNS AND STABLES

While the requirement for concrete floors in milking barns and stables is necessary for good sanitation, climatic conditions in some areas of the country has created a need for convalescent (maternity) pens to be located in milking barns and stables.

Therefore, convalescent pens may be allowed in the milk barn or stable. Provided that the following requirements are met:

1. All floors in the production milking facility, with the exception of the convalescent pens, must be of an impervious surface, with slopes for drainage as currently listed in the regulations.
2. Milk from animals milked in convalescent pens with non-impervious floors must not enter the distribution system or be sold.
3. Routine milking in pens shall not be allowed.
4. Pens must be located in a location so as not to contaminate milk holding transfer facilities or water supplies. Convalescent pens cannot be within 15 meters (50 feet) of a well.
5. A minimum of a 15 centimeters (6 inches) curb shall be provided on all exposed sides of the pen(s).
6. Convalescent pens shall be well bedded, clean and dry at all times.
7. No water faucet or drinking fountain shall be located within the curbed area.
8. State sanitarians, at their discretion, may require cleaning and/or reconstruction of such pens, based at intervals as necessary when the pens present a sanitation problem.
9. It is recommended that the number of pens be limited to one (1) per fifty (50) lactating animals.

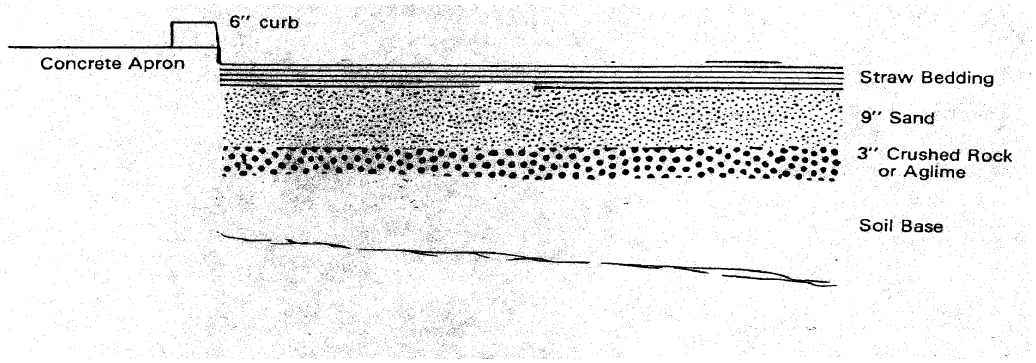

Figure 5. Side Cross Section of a Convalescent Pen

IV. GUIDELINES FOR CONVENTIONAL STALL BARN WITH GUTTER GRATES OVER LIQUID MANURE STORAGE

INTRODUCTION

The use of liquid manure storage under milking barns can be a cost, labor and energy efficient method for handling dairy animal wastes. This type of system can aid in pollution control and will provide a safe and healthy environment for cattle and humans under the following guidelines:

1. Plans for the construction of a conventional stall barn, with gutter grates over liquid manure storage, shall be submitted to the Regulatory Agency for approval before work is begun. Upon completion of the work, the builder shall furnish the purchaser with a signed written statement certifying that the system is constructed so as to be in full compliance with these guidelines.
2. The storage capacity of the liquid manure tank shall be for a minimum of nine months.
3. A negative pressure mechanical ventilation system must be installed to meet the following requirements: (Refer to Figures 6 and 7)
   a. Provide a maximum exhaust capacity of forty (40) air changes per hour from the occupied area. Of this total, about one-half, twenty (20) air changes per hour shall be considered the cold weather part of the system and shall be exhausted through the manure storage area. The remaining twenty (20) air changes per hour shall be considered the warm weather part of the system and shall be exhausted through the barn walls.
   b. Of the twenty (20) air changes exhausted through the manure storage area there shall be a minimum continuous exhaust of four (4) air changes per hour. The additional cold weather capacity of about sixteen (16) air changes per hour shall be thermostatically controlled. All fans exhausting from the manure storage area shall be installed in permanent fan houses built on the exterior wall of the barn and connected directly to the manure storage area. These fans must be single-speed with a certified delivery rating against 6 millimeters (¼ inch) water gauge static pressure. One pit fan must operate continuously. Airflow must be from the occupied area through the gutters. The use of variable-speed fans is prohibited.
   c. Fans supplying the additional summer capacity shall be mounted to discharge directly through the barn walls. They may be mounted on the outside of the building and the openings closed with insulated panels in cold weather, or when mounted in the walls be protected with an inside insulated cover to eliminate condensation and frost formation on the shutters and mountings. Warm weather fans are to be located on the same side of the barn as the pit fans. They must have a certified delivery rating against 3 millimeters (⅛-inch) water gauge static pressure and should be single speed.
   d. All fans, except those providing the minimum continuous exhaust rate are to be controlled by thermostats located away from the barn walls. All pit fans are to be in operation before any of the wall fans are started. An electrical thermal overload device of the proper size shall protect each fan.
   e. Calculation Method: To calculate the fan capacity in cubic feet per minute (cfm) for a particular barn, multiply the length times the width times the average ceiling height, all in feet, to obtain the volume. Divide the volume by fifteen (15) to obtain the minimum continuous capacity of four (4) air changes per hour in cfm (4 x 15 = 60 minutes).

$$\frac{W \times L \times H}{15} = \text{cfm}$$

For Example: Barn width 36', length 160' and average ceiling height 8'-6". This would be a reasonable size for sixty (60) stalls and two (2) pens. The calculation of the minimum continuous exhaust for this example would be:

$$\frac{36 \times 160 \times 8.5}{15} = 3{,}264 \text{ cfm}$$

Total cold weather capacity of twenty (20) air changes per hour equals five (5) times the minimum capacity: 3,264 x 5 = 16,320 cfm.

Use two (2) fans of 3,264 each and two (2) fans of 4,896 cfm each to make up the total. Build two (2) fan houses. Mount one 3,264 cfm and one 4,896 cfm fan in each. Operate one 3,264 cfm fan continuously. Thermostatically control the second 3,264 cfm fan at 4.4ºC (40°F). Control the two (2) larger fans with thermostats set at 6°C (43°F) and 8°C (46°F). Divide the summer capacity of an additional twenty (20) air changes per hour among three (3) fans of 5,440 cfm each. Locate these fans in the walls. Control them with thermostats set to 10°C–13°C (50°F–56°F). (Refer to Figure 6 for the approximate locations for all fans) Fans of the exact calculated capacity are usually unavailable. Always select those having a slightly higher rather than lower capacity.

f. Adequate incoming fresh air, to enable the fan exhaust system to function as designed, must be provided. A continuous slot inlet with manual adjustment on one (1) side is recommended to provide uniform fresh air distribution throughout the barn. (Refer to Figure 7) Adjustment of the slot opening opposite the fans is to be done manually for cold and warm weather conditions. Careful construction of the fresh air intake system is essential to the satisfactory performance of the ventilation system.

4. A stand-by generator to supply electric current to the ventilation system, in the event of a power failure, shall be provided.

5. Construction Requirements:

a. The floor system over the pit shall be designed to safely support all animal weight, plus the possibility of a tractor that may be needed to remove a sick or dead animal. Agitating and pumping of the stored manure shall be done through annexes built outside the barn. (Refer to Figures 6 and 7) Service alley floor and lactating animal stall platforms shall be constructed to drain to the grated gutter tank opening, located between the lactating animal stall and the service alley.

b. Waste water from the milkhouse can be discharged into the pit. Sanitary (toilet) waste shall not be disposed of in the manure storage tank. When wastewater from the milkhouse is discharged into the pit, a drop pipe must be connected to the discharge line so that the liquid waste will be deposited beneath the surface of the tank contents to prevent turbulence and possible odor production.

c. Grates over the gutters, tank slot openings, shall be of sufficient strength to support all applied loads. A suitable grate design is one using 16 millimeters (⅝ inches) smooth steel bars running the length of the open gutter. The distance between the center of the first bar and the vertical face of the stall platform should be 57 millimeters (2¼ inches). The

remaining bars should be spaced 63 millimeters (2½ inches) center-to-center. Support bars crossing the gutters should be 19 millimeters (¾ inch) diameter and spaced 40 centimeters (16 inches) center-to-center.

6. Little or no bedding can be used with this system, rubber mats or equivalent, and lactating animal trainers shall be installed at the time the barn is constructed. Daily cleaning of grates with a stiff broom or scraper is recommended.

7. Other construction criteria and management practices recommended for stall dairy barns should be followed.

8. Requirements for emptying holding tanks:

   a. Remove all animals and post signs on all doors that no one is to enter the milking barn during the time the tank is being agitated;

   b. All pit fans must be operating during agitation and emptying;

   c. All milkhouse and feed storage area openings, doors, windows, etc., must be closed; and

d. The milking barn must remain evacuated by animals and people for at least one (1) hour, after agitation of the holding tank is completed.

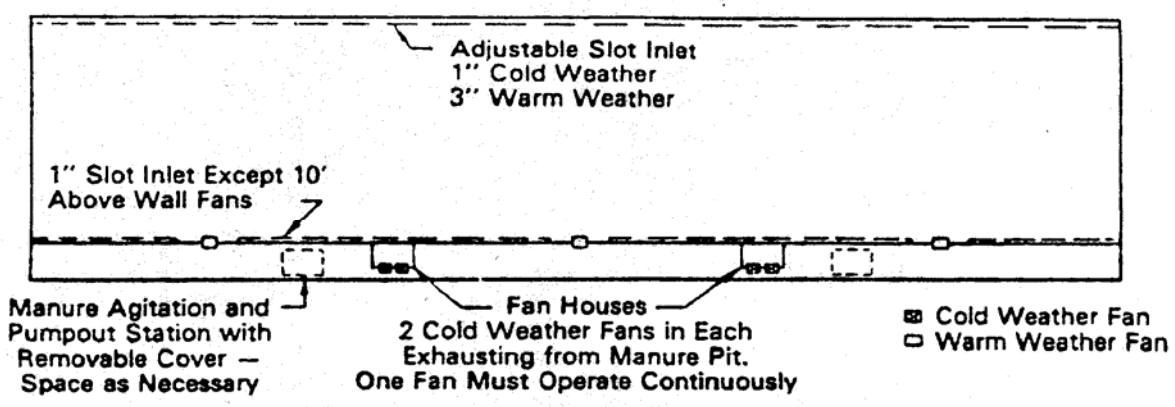

Figure 6. Schematic Diagram Showing Suggested Exhaust Fan Locations for a Typical Stall Dairy Barn with Gutter Grates Over Liquid Manure Storage

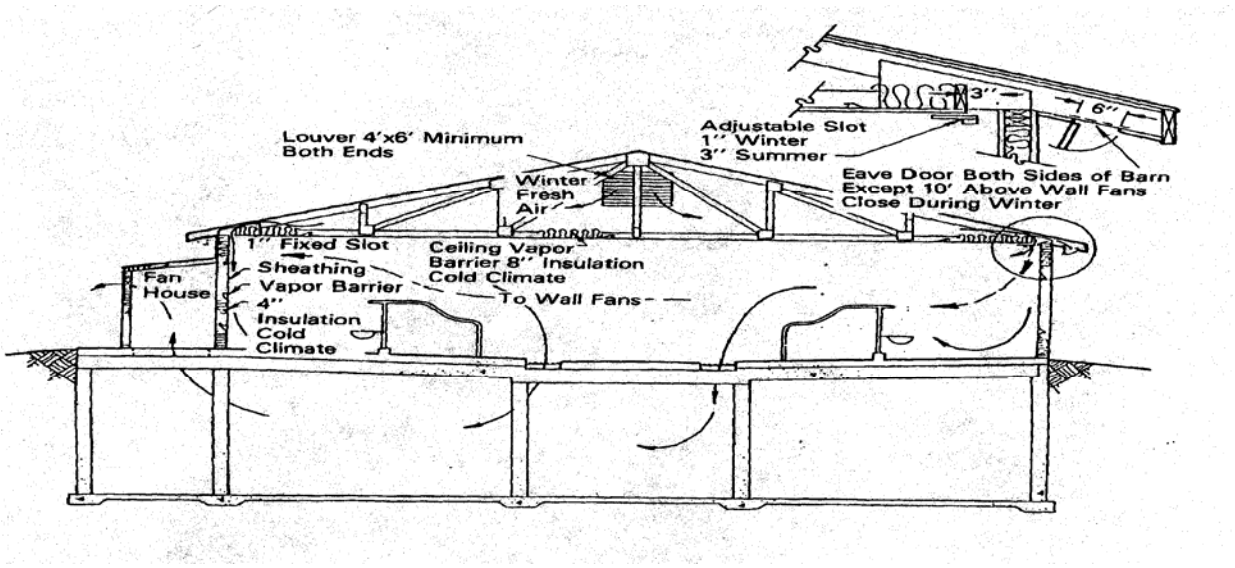

Figure 7. Schematic Diagram Showing General Pattern of Ventilation Air Movement, Slot Inlet Design and Fan House for Pit Fans

V. DAIRY - CONSTRUCTION AND OPERATION

MILKING BARN, STABLE OR PARLOR

Numerous factors, including the size and topography of the farm, the availability of utilities, the condition and disposition of existing buildings, the dairy operator's ultimate goals for the enterprise, and the operator's construction budget serve to make each milk producer's herd housing problems individual and unique.

While there has been a tendency for workers to develop strong convictions about the practicability of given housing or milking systems, there is little doubt that the success or failure of most dairy farm operations may be traced to good or poor planning. When the unique problems of each system in its individual applications are given proper consideration, the job of producing clean milk is made easier and compliance with regulations is simplified. For example, operators of barns in which lactating animals are housed and milked will find that efficient ventilation not only reduces condensation but also relieves the problem of dust and mold on walls, ceilings and windows. When window sills are sloped or windows set flush with interior walls in stanchion barns, the accumulation of dust and unwanted miscellaneous items is similarly lessened. Covered recessed light fixtures remain clean longer and are less subject to damage than those projecting from the ceiling.

Operators of milking parlor loose-housing systems, on the other hand, will value design features such as mechanically operated doors, which speed up animal traffic, and glazed wall finishes, which cut down the time required for proper post-milking wash-up of the parlor. Cleaner lactating animals result from proper planning and management of exercise yards and bedded areas. At least 9 square meters (100 square feet) of surfaced yard and not less than 5 square meters (50 square feet) of bedded space are recommended for each animal to be accommodated. Provisions must also be made for the removal at least daily of manure from exercise yards and traffic lanes. Operators utilizing loose housing have shown considerable interest in free-stall housing. Many workers have concluded that it provides the solution to the problems of unclean lactating animals and excessive bedding demands that have plagued loose housing in past years. Milk producers planning new construction or large-scale changes in existing housing should carefully study its features.

Adequate light must be available in all work areas in the milking barn, stable or parlor. Because many dairy functions are frequently performed after dark, it is important that the required minimum of ten (10) foot-candles (110 lux) of illumination be available from artificial sources. While absolute certainty of compliance with this requirement can only be confirmed by the use of a light meter, experience has shown that milking barns which otherwise meet the standards of this *Ordinance* will be properly lighted when equipped with one (1) 100-watt bulb (or its fluorescent equal) for each three (3) stanchions or per 3 meters (10 linear feet) of walkway behind each row of lactating animals in face-in barns or between rows of lactating animals in face-out barns. In addition, a smaller number of bulbs, equally spaced, are recommended for feed alleys in front of the lactating animals. When natural light is utilized, a minimum of .37 square meter (4 square feet) of window space for each 5.6 square meter (60 square feet) of floor space is recommended.

Construction plans and suggestions for the various systems of animal management are available to the sanitarian and the dairyman from numerous sources, including the USDA, the county extension agent, farm periodicals and the trade associations serving the building supply industry.

MILKHOUSE

Milkhouses should be large enough to provide adequate space to meet present needs and should take into account the prospect of future expansion. Installed milkhouse equipment should be readily accessible to the operator. Aisles should be at least 76 centimeters (30 inches) wide, with added allowance at the outlets of bulk milk tanks, adjacent to wash-and-rinse vats and where operational conditions warrant. It is especially important that the space available to bulk milk tanks and mechanical cleaning systems be adequate to permit their disassembly, inspection and servicing.

Floor drains should not be located under bulk milk tanks unless there is sufficient room for servicing. Floor drains should not be located directly under the outlet of a bulk milk tank. Drains and waste disposal systems should be adequate to drain the volume of water used in rinsing and cleaning.

Milkhouses should be well ventilated. Proper ventilation not only avoids the obvious disadvantages of condensation on equipment and walls, it also lengthens the useful life of the building and its equipment. The constant need for renewal of painted surfaces, the repair of wooden fixtures and frames and the removal of algae and mold from walls and ceilings of poorly ventilated milkhouses can represent a continuing expense to the operator.

Where possible, windows should be placed to provide cross ventilation. In addition, one (1) or more ceiling vents should be located to receive water vaporizing from wash-and-rinse vats and other sources of evaporative moisture.

Glass brick is sometimes substituted for windows in milkhouse construction. In these instances, mechanical ventilation must be provided. A system affording filtered positive air pressure is recommended over exhaust ventilation, as the latter frequently draws dust, insects, and odors into the milkhouse.

The great demand for water under pressure in milkhouse operations has emphasized the importance of protecting plumbing from freezing. Devices that have proved effective, include the insulation of water lines, the use of wrap-around heat tape, infrared lamps, and thermostatically controlled space heaters.

Insulated milkhouses make protection against freezing easier and more economical, and offer the additional advantage of greater comfort for the operator. The factor of personal convenience frequently results in better performance by the operator, with subsequent benefits to milk quality.

Automated milking and mechanical cleaning systems of milking equipment has increased the use of hot water in the milkhouse. The following Table indicates the volumes of water required to fill 30 meters (100 feet) of pipeline of varying diameters:

Table 9. Work Water Volume of Various Sized Pipelines

Pipe Diameter (Inches)	Gallons
1	4.7
1.5	9.2
2	16.3

Since most cleaning installations employ a pre-rinse, followed by wash-and-rinse cycles, this Table actually represents only one-third (⅓) the usual milking-time demand for heated water. Also, it does not include the "take up" of collecting jars, pumps, rubber parts, etc.

Udder washing, bulk milk tank cleaning and similar milkhouse tasks offer additional uses for hot water.

Sanitarians should compute the hot water demand of the individual milking systems under their supervision and require that not less than the minimum amount be available at all times. Milk producers should be made aware of the fact that effective cleaning of mechanically cleaned installations is impossible without adequate hot water and should be encouraged to provide a supply which exceeds their expected need. Such planning avoids emergency shortages and allows for normal expansion of the herd and facilities.

Detailed plans for milkhouses, as well as recommendations on hot water needs, insulation, lighting and ventilation are available from power companies, building supply associations, County Agricultural Extension Agents and State Universities.

Refrigeration, electrical or mechanical systems powered by gasoline or diesel engines, have no place in a milkhouse, milking barn, or in any communicating passageway between the milkhouse and milking barn. Such equipment is characteristically given to oil leakage and the discharge of fumes. The space occupied by it is difficult to keep clean and frequently becomes a gathering place for trash and flammable materials. With effective planning, these engines and their accessory equipment can be located, without detriment to their performance, in a separate room or building adjacent to the barn or milkhouse.

MILKING METHODS

Milking methods must be geared to permit the efficient withdrawal of milk without introducing undue numbers of bacteria or causing injury to the udder.

In addition to assessing the nation's milk producers a cost, which has been estimated to approach $500 million annually, mastitis has been found to pose serious public health hazards. The most widespread of these is a gastrointestinal disorder caused by toxins produced by certain strains of staphylococci.

It has been known for many years that a relationship exists between mastitis and milking practices. While not all the facts are known about mastitis, it is abundantly clear that its control is enhanced by use of mechanically sound milking equipment and good milking practices. The National Mastitis Council (NMC) has described a satisfactory milking system as one which:

1. Maintains a stable vacuum in the teat cup and at a level adequate for completely milking most udders in three (3) to five (5) minutes;
2. Does not stress the tissues of the teat by excessive stretching and ballooning;
3. Produces massage without harsh action; and
4. Is designed so that the entire system can be sanitized efficiently and satisfactorily.

The NMC considers proper milking procedure to include the following:

1. Before the milking unit is applied to the udder, the operator takes thirty (30) seconds to prepare the lactating animal in the recommended manner to obtain milk letdown, and the milking machine should be applied immediately thereafter;

2. The teat cups are attached in a manner to limit the volume of air drawn into the system;
3. The teat cups are positioned as low on the teats as practicable;
4. The operator stays near the machine and, at the end point of milk removal, the claw is briefly pulled down to open the teat cavity and remove the strippings. Stripping by machine should not extend over a period of more than fifteen to twenty (15-20) seconds. Prolonging stripping can be injurious to the udder;
5. Before removing the machine, the vacuum to the teat cups is broken and the cups removed in a gentle manner; and
6. To avoid over-milking, the operator should limit the number of machines in use. Two (2) bucket-type units, two (2) movable pipeline units or three (3) fixed units, in a walk-through barn, usually represent maximum workloads with conventional milking systems.

Hooded, or small-mouthed pails may be used for carrying only that milk which has been drawn into them by hand-milking. Their extended use as carrying pails is considered hazardous in view of their inability to be covered or otherwise protected from flies, dust, splash, etc.

REVERSE FLUSH SYSTEMS

Systems are acceptable if they are designed, installed, and operated in accordance with the following parameters for reverse flush systems:

1. All product-contact surfaces shall conform to the construction criteria of Item 9r of this *Ordinance*.
2. An intervening break to the atmosphere shall be provided between the water and/or chemical solution and the product and/or product-contact surfaces at all times.
3. If a pre-rinse cycle is used it shall be with safe water.
4. The system shall provide for:
   a. A chemical solution cycle with a chemical solution complying with provisions of Appendix F. of this *Ordinance*;
   b. The chemical solution strength shall be limited to that strength necessary to accomplish its intended effect and shall not leave a significant residual in the milk;
   c. A post-rinse cycle with safe water. The use of treated water to prevent psychrophilic microorganism contamination should be considered; and
   d. A drain cycle with sufficient time to drain or remove all moisture from the product-contact surfaces of the reverse flush system.
5. When air under pressure is used in contact with product or solution-contact surfaces, it shall comply with the requirements for air under pressure contained in Item 14r of this *Ordinance*, provided that an exception to the piping requirement for the air piping downstream from the terminal filter may be granted when:
   a. The piping is used only for filtered air;
   b. At least one (1) access point is available to determine cleanliness of the air piping; and
   c. The piping is of a smooth, non-absorbent, corrosion-resistant, non-toxic material, including any adhesives used in joints.

In some installations, a check-valve may be required to prevent water and/or chemical solution from entering these airlines.

DRUG RESIDUE AVOIDANCE CONTROL MEASURES

Animal identification and record keeping are critical for avoiding milk drug residues. Producers should establish systems to ensure that animal drugs are used properly and be able to provide evidence that adequate control over the administration of drugs to prevent residues in milk and/or meat has been implemented. These control systems should accomplish the following objectives:

1. Lactating animals treated with medicinal agents are:
   a. Identified, i.e., leg bands, chalk marks, etc.; and/or
   b. Segregated; or
   c. Other means provided to preclude the adulteration of milk offered for sale.
2. Treatment Records include the following information:
   a. Identity of the animal(s) treated;
   b. Date(s) of treatment;
   c. Drug(s) or other chemicals administered;
   d. Dosage administered;
   e. Milk discard time; and
   f. Withdrawal time prior to slaughter, even if zero.

NOTE: Records may consist of paper and file folders, card files, appointment book-type calendars, monthly paper calendars, chalk boards (temporary records), electronic computer records, etc.

3. Maintenance of Records: The proper use or misuse of some animal drugs may cause prolonged residues in milk (4 to 45 days) and meat (18 to 24 months). Verification of drug treatment records may be necessary in the event of an investigation or traceback by the industry or Regulatory Agency to identify specific treated animal(s) that may be related to a milk or dairy beef residue. Producers should maintain all treatment records for a minimum of two (2) years in the event of a need to traceback or follow up on a confirmed milk or meat residue.
4. Quarantine/segregation of treated animals or other means to preclude the sale of milk or offering of treated animals for sale for slaughter prior to the end of the prescribed withdrawal time.
5. Education of all farm personnel involved in treating animals on proper drug use and methods to avoid marketing adulterated milk or meat for human food.

INSECT AND RODENT CONTROL

The complete elimination of flies from the farm premises is practically unattainable. However, a major reduction of fly infestation is obtainable by the dairy farm operator who conscientiously follows a sustained program of sanitation, screening and the proper use of insecticides.
The milk producer or milk plant operator must be continually aware of the potential hazard to people and animals which is inherent in most pesticides, including insecticides and rodenticides. It is important that they employ only those insecticides and rodenticides that are recommended by competent authority for the insect and rodent problems they seek to overcome, and that they follow implicitly the manufacturer's label directions for their use. Questions on the use of

pesticides should be referred to the appropriate Regulatory Agency and/or County Agricultural Extension Agent.

Intermittent, time release, high-pressure insect fogging or spraying systems shall be installed and operated in accordance with the following guidelines:

1. The insecticide must be registered with the EPA.
2. The label on the insecticide container shall specify that the insecticide may be used on dairy farms and in milking areas.
3. The label shall contain adequate instructions for the safe use of the insecticide.
4. The insecticide shall be designated for use in an intermittent, time release, high-pressure insect fogging system and used in accordance with the labeling directions.
5. The container, tank or barrel of concentrated insecticide or use solution and the pumping or pressurizing equipment shall not be located in the milkhouse.
6. Nozzles, which would emit, spray or fog the insecticide shall not be located in the milkhouse.
7. Nozzles shall be located, positioned and operated so that they will not spray, fog, drip or drain any insecticide on milk pipeline and return solution line openings, milking machine appurtenances, including milk claws, inflations, flow sensors and interconnecting flexible milk tubing, milk receivers or releasers, milk pumps, weigh jars, milk measuring equipment or over any area where milk is poured, strained or transferred.
8. Nozzles shall be located, positioned and operated so that they will not contaminate any feed or water.
9. The fogging or spraying systems, which have nozzles located in the milking barn or parlor shall not be operated during milking. In addition, the system shall not operate during the washing and sanitizing of milking equipment in a milking barn or parlor. This may be accomplished by inter-wiring the system so that it will not operate when the vacuum pump is operating or by a master cut-off switch with a conspicuously posted sign warning the operator that the switch must be turned off while milking and cleaning and sanitizing.
10. The fogging or spraying system shall operate so that only the amount of insecticide necessary to accomplish the intended purpose of reducing fly and other insect populations is used. Excessive insecticide, which leaves a film on exposed walls, floors, and equipment, should be considered a violation of Item 19r of this *Ordinance*.
11. These systems should be considered an adjunct to and not a replacement for good sanitary practices of proper manure removal and disposal to adequately control fly and other insect breeding on dairy farms.

Effective rodent control, like insect control, is dependent on sanitation for much of its success. The careful elimination of trash and woodpiles; the rodent-proofing of feed bins, corn cribs and similar structures; the prompt removal of spilled feed and manure to places of ultimate disposition; and the deliberate elimination of protected harborage areas in farm buildings, all tend to discourage rodents near the dairy farm. Such a program, also pays excellent dividends in feed savings, lowered maintenance costs for farm buildings, reduced fire hazards and lessened risk of disease outbreaks among farm animals.
Anticoagulant poisons, Warfarin, Fumarin, etc. have offered improved means of controlling rodents on the farm. Used according to directions, and with due precaution against their

consumption by domestic animals, these chemicals should keep the rodent population in check while additional preventive programs are instituted.

REFERENCES

Bates, D. W. How to Plan Your Dairy Stall Barn, M-132 (Revised 1972) University of Minnesota.

Midwest Plan Service, Ames, Iowa, Plan No. 72327, Dairy Barn, 60 Tie Stalls, Gable Roof, Liquid Manure 1974.

Bates, D. W. and J. F. Anderson, 1979. Calculation of Ventilation Needs for Confined Cattle, J. of the American Veterinary Medical Association 1979.

Midwest Plan Service, Ames, Iowa, Dairy Housing and Equipment Handbook 1985.

APPENDIX D. STANDARDS FOR WATER SOURCES

The *Grade "A" PMO*, formal FDA interpretations of the *Grade "A" PMO* and other written USPHS/FDA opinions will be used in evaluating the acceptability of individual water supplies and water system construction requirements at dairy farms, milk plants, and single-service container manufacturing facilities.

State Water Control Authority requirements, which are less stringent than the *Grade "A" PMO*, shall be superseded by the *Grade "A" PMO*. State Water Control Authority requirements, which are more strict than the *Grade "A" PMO*, shall not be considered in determining the acceptability of water supplies during ratings, check ratings, single-service listing evaluations and audits. For example, the *Grade "A" PMO* requires a satisfactory farm water sample every three (3) years. If State law required such samples to be taken annually, a SRO conducting a sanitation rating, which includes that farm, will give that farm full credit for water sample frequency, if the *Grade "A" PMO* three (3) year requirement is met, even though, the State required annual frequency is not met.

Supplies other than individual water supplies, which have been approved as safe by the State Water Control Authority, shall be considered to be acceptable sources as provided in Section 7 of this *Ordinance* for Grade "A" inspections, as well as for all other IMS purposes without further inspection of the spring, well or reservoir treatment facility(ies), testing records, etc.

I. LOCATION OF WATER SOURCES

DISTANCE FROM SOURCES OF CONTAMINATION

All ground water sources should be located a safe distance from sources of contamination. In cases where sources are severely limited; however, a ground water aquifer that might become contaminated may be considered for a water supply, if treatment is provided. After a decision has been made to locate a water source in an area, it is necessary to determine the distance the source should be placed from the origin of contamination and the direction of water movement. A determination of a safe distance is based on specific local factors described in the following Section on **SANITARY SURVEY**.

Because many factors affect the determination of "safe" distances between ground water supplies and sources of pollution, it is impractical to set fixed distances. Where insufficient information is available to determine the "safe" distance, the distance should be the maximum that economics, land ownership, geology and topography will permit. It should be noted that the direction of ground water flow does not always follow the slope of the land surface. A person with sufficient training and experience to evaluate all of the factors involved should inspect each installation.

Since the safety of a ground water source depends primarily on considerations of good well construction and geology, these factors should be the guides in determining safe distances for different situations. The following criteria apply only to properly constructed wells, as described in this Appendix. There is no safe distance for a poorly constructed well.

When a properly constructed well penetrates an unconsolidated formation, with good filtering properties, and when the aquifer itself is separated from sources of contamination by similar materials, research and experience have demonstrated that 15 meters (50 feet) is an adequate distance separating the two. Lesser distances should be accepted, only after a comprehensive

sanitary survey, conducted by qualified Local or State Agency Officials, has determined such lesser distances are both necessary and safe.
If it is proposed to install a properly constructed well in formations of unknown character, the State or U.S. Geological Survey and the Local or State Health Agency should be consulted.
When wells must be constructed in consolidated formations, extra care should always be taken in the location of the well and in setting "safe" distances, since pollutants have been known to travel great distances in such formations. The owner should request assistance from the Local or State Health Agency.

The following Table is offered as a guide in determining acceptable distances of a well from sources of contamination:

Table 10. Distance of a Well from Sources of Contamination

Formation	**Minimum Acceptable Distance of a Well from Sources of Contamination**
Favorable (Unconsolidated)	15 meters (50 feet) – Lesser distances only on Health Department approval following a comprehensive sanitary survey of the proposed site and immediate surroundings.
Unknown	15 meters (50 feet) – Only after a comprehensive geological survey of the site and its surroundings has established, to the satisfaction of the Health Department that favorable formations do exist.
Poor (Consolidated)	Safe distances can be established only following both the comprehensive geological and comprehensive sanitary surveys. These surveys also permit determining the direction in which a well may be located with respect to sources of contamination. In no case should the acceptable distance be less than 15 meters (50 feet).

EVALUATING CONTAMINATION THREATS TO WELLS

Conditions unfavorable to the control of contamination and that may require specifying greater distances between a well and sources of contamination are:

1. **Nature of the Contaminant:** Human and animal excreta and toxic chemical wastes are serious health hazards. Salts, detergents and other substances that dissolve in water can mix with ground water and travel with it. They are not ordinarily removed by natural filtration.
2. **Deeper Disposal:** Cesspools, dry wells, disposal and waste injection wells and deep leaching pits that reach aquifers or reduce the amount of filtering earth materials between the wastes and the aquifer increase the danger of contamination.
3. **Limited Filtration:** When earth materials surrounding the well and overlying the aquifer are too coarse to provide effective filtration, as in limestone, coarse gravel, etc., or when they form a layer too thin, the risk of contamination is increased.
4. **The Aquifer:** When the materials of the aquifer itself are too coarse to provide good filtration, as in limestone, fractured rock, etc., contaminants entering the aquifer through outcrops or excavations may travel great distances. It is especially important in such cases to know the direction of ground water flow and whether there are outcrops of the formation, or excavations reaching it, "upstream" and close enough to be a threat.

5. **Volume of Waste Discharged:** Since greater volumes of wastes discharged and reaching an aquifer can significantly change the slope of the water table and the direction of ground water flow, it is obvious that heavier discharges can increase the threat of contamination.
6. **Contact Surface:** When pits and channels are designed and constructed to increase the rate of absorption, as in septic tank leaching systems, cesspools and leaching pits, more separation from the water source will be needed than when tight sewer lines or waste pipes are used.
7. **Concentration of Contamination Sources:** The existence of more than one source of contamination, contributing to the general area, increases the total pollution load and, consequently, the danger of contamination.

SANITARY SURVEY

The importance of a sanitary survey of water sources cannot be overemphasized. With a new supply, the sanitary survey should be made in conjunction with the collection of initial engineering data, covering the development of a given source and its capacity to meet existing and future needs. The sanitary survey should include the detection of all health hazards and the assessment of their present and future importance. Persons trained and competent in public health engineering and the epidemiology of waterborne diseases should conduct the sanitary survey. In the case of an existing supply, the sanitary survey should be made at a frequency compatible with the control of the health hazards and the maintenance of a good sanitary quality. The information furnished by the sanitary survey is essential to complete the interpretation of bacteriological and frequently the chemical data. This information should always accompany the laboratory findings. The following outline covers the essential factors that should be investigated or considered in a sanitary survey. Not all of the Items are pertinent to any one (1) supply and, in some cases; Items not in the list would be important additions to the survey list.

Ground Water Supplies:
1. Character of local geology and slope of ground surface.
2. Nature of soil and underlying porous strata; whether clay, sand, gravel, rock (especially porous limestone); coarseness of sand or gravel; thickness of water-bearing stratum; and depth to water table and location; and log and construction details of local wells in use and abandoned.
3. Slope of water table, preferably determined from observational wells or as indicated, presumptively, but not certainly, by the slope of ground surface.
4. Extent of drainage area likely to contribute water to the supply.
5. Nature, distance and direction of local sources of pollution.
6. Possibility of surface-drainage water entering the supply and of wells becoming flooded and methods of protection.
7. Methods used for protecting the supply against pollution by means of sewage treatment, waste disposal and the like.
8. Well Construction:
   a. Total depth of well.
   b. Casing: Diameter; wall thickness; material; and lengths from surface.
   c. Screen or Perforations: Diameter; material; construction; locations; and lengths.
   d. Formation Seal: Material, cement, sand, bentonite, etc.; depth intervals; annular thickness; and method of placement.

9. Protection of Well at Top: Presence of sanitary well seal; casing height above ground floor or flood level; protection of well vent; and protection of well from erosion and animals.
10. Pump-house Construction: Floors, drains, etc.; capacity of pumps; and draw-down when pumps are in operation.
11. Availability of an Unsafe Supply: Usable in place of normal supply, hence involving danger to the public health.
12. Disinfection Equipment: Supervision; test kits or other types of laboratory control.

Surface Water Supplies:
1. Nature of Surface Geology: Character of soils and rocks.
2. Character of Vegetation: Forests; cultivated and irrigated land; including salinity, effect on irrigation water, etc.
3. Population and sewered population per square mile of catchment area.
4. Methods of sewage disposal, whether by diversion from watershed or by treatment.
5. Character and efficiency of sewage-treatment works on watershed.
6. Proximity of sources of fecal pollution to intake of water supply.
7. Proximity, sources and character of industrial wastes, oil field brines, acid mine waters, etc.
8. Adequacy of supply as to quantity.
9. For Lake or Reservoir Supplies: Wind direction and velocity data; drift of pollution; sunshine data; and algae.
10. Character and Quality of Raw Water: Coliform organisms (MPN); algae; turbidity; color; and objectionable mineral constituents.
11. Nominal period of detention in reservoirs or storage basin.
12. Probable minimum time required for water to flow from sources of pollution to reservoir and through reservoir intake.
13. Shape of reservoir, with reference to possible currents of water, induced by wind or reservoir discharge, from inlet to water supply intake.
14. Protective measures in connection with the use of watershed to control fishing, boating, landing of airplanes, swimming, wading, ice cutting and permitting animals on marginal shore areas and in or upon the water, etc.
15. Efficiency and constancy of policing.
16. Treatment of Water: Kind and adequacy of equipment; duplication of parts; effectiveness of treatment; adequacy of supervision and testing; contact period after disinfection; and free chlorine residuals carried.
17. Pumping Facilities: Pump-house; pump capacity; standby units; and storage facilities.

II. CONSTRUCTION

SANITARY CONSTRUCTION OF WELLS

The penetration of a water-bearing formation by a well provides a direct route for possible contamination of the ground water. Although there are different types of wells and well construction, there are basic sanitary aspects that must be considered and followed:

1. The annular space outside the casing shall be filled with a watertight cement grout or puddled clay from a point just below the frost line or deepest level of excavation near the well to as deep as necessary to prevent entry of contaminated water.
2. For artesian aquifers, the casing shall be sealed into the overlying impermeable formations so as to retain the artesian pressure.
3. When a water-bearing formation containing water of poor quality is penetrated, the formation shall be sealed off to prevent the infiltration of water into the well and aquifer.
4. A sanitary well seal, with an approved vent, shall be installed at the top of the well casing to prevent the entrance of contaminated water or other objectionable material.

Well Casing or Lining: All that part of the suction pipe or drop pipe of any well within 3 meters (10 feet) of and below the ground surface shall be surrounded by a watertight casing pipe extending above the ground, platform or floor surface, as the case maybe, and covered at the top as herein provided. The casing of every well shall terminate above the ground level; the annular space outside the casing shall be filled with a watertight cement grout or clay, with similar sealing properties, from the surface to a minimum of 3 meters (10 feet) below the ground surface. A dug well, in lieu of a casing pipe, may be provided with a substantial watertight lining of concrete, vitrified tile with outer concrete lining, or other suitable material. Such lining shall extend at least 3 meters (10 feet) below the surface and shall extend up to the well platform or pump room floor with a watertight connection. In such case, the platform or floor shall have a suitable sleeve pipe, surrounding the suction pipe or drop pipe, and projecting above as herein provided for a casing pipe.

Well Covers and Seals: Every well shall be provided with an overlapping, tight-fitting cover at the top of the casing or pipe sleeve to prevent contaminated water or other material from entering the well.

The sanitary well seal, in a well exposed to possible flooding, shall be either watertight or elevated at least .6 meters (2 feet) above the highest known flood level. When it is expected that a well seal may become flooded, it shall be watertight and equipped with a vent line, whose opening to the atmosphere, is at least .6 meters (2 feet) above the highest known flood level.

The seal in a well not exposed to possible flooding shall be either watertight, with an approved vent line, or self-draining, with an overlapping and downward flange. If the seal is of the self-draining, non-watertight, type, all openings in the cover should be either watertight or flanged upward and provided with overlapping, downward flanged covers.

Some pump and power units have closed bases that effectively seal the upper terminal of the well casing. When the unit is the open type, or when it is located at the side, as with some jet and suction pump type installations, it is especially important that a sanitary well seal be used. There are several acceptable designs consisting of an expandable neoprene gasket, compressed between two (2) steel plates. They are easily installed and removed for well servicing. Pump and water well suppliers normally stock sanitary well seals.

If the pump is not installed immediately after well drilling and placement of the casing, the top of the casing should be closed with a metal cap screwed or tack welded into place, or covered with a sanitary well seal.

For large diameter wells, such as dug wells, it would be difficult to provide a sanitary well seal, consequently, a reinforced concrete slab, overlapping the casing and sealed to it with a flexible

seal and/or rubber gasket, should be installed. The annular space outside the casing should first be filed with suitable grouting or sealing materials, i.e., cement, clay, or fine sand.
A well slab alone is not an effective sanitary defense, since it can be undermined by burrowing animals and insects, cracked from settlement or frost heave or broken by vehicles and vibrating machinery. The cement grout formation seal is far more effective. It is recognized however, that there are situations that call for a concrete slab or floor around the well casing to facilitate cleaning and improve appearance. When such a floor is necessary, it shall be placed only after the formation seal and the pit-less installation have been inspected.
Well covers and pump platforms shall be elevated above the adjacent finished ground level. Pump room floors shall be constructed of reinforced, watertight concrete and carefully leveled or sloped away from the well, so that surface and wastewater cannot stand near the well. The minimum thickness of such a slab or floor shall be 10 centimeters (4 inches). Concrete slabs or floors shall be poured separately from the cement formation seal and when the threat of freezing exists, insulated from it and the well casing by a plastic or mastic coating or sleeve to prevent bonding of the concrete to either.
All water wells shall be readily accessible at the top for inspection, servicing and testing. This requires that any structure over the well be easily removable to provide full, unobstructed access for well servicing equipment. The so-called "buried seal," with the well cover buried under several meters (yards) of earth, is unacceptable because:

1. It discourages periodic inspection and preventive maintenance;
2. It makes severe contamination during pump servicing and well repair more likely;
3. Any well servicing is more expensive; and
4. Excavation to expose the top of the well increases the risk of damage to the well, the cover, the vent and the electrical connections.

Well Pits and Drainage: Because of the pollution hazards involved, the well head, well casing, pump, pumping machinery, valve connected with the suction pump or exposed suction pipe shall not be permitted in any pit, room or space extending below ground level, or in any room or space above the ground, which is walled-in or otherwise enclosed, so that it does not have free drainage by gravity to the surface of the ground. Provided, that a dug well properly constructed, lined and covered, as herein prescribed, shall not be construed to be a pit. Provided further, that pumping equipment and appurtenances may be located in a residential basement, which is not subject to flooding. And provided further, that in the case of existing water supplies which otherwise comply with the applicable requirements of this Appendix, pit installations may be accepted, under the following conditions, when permitted by the State Water Control Authority:

1. Pits shall be of watertight construction, with walls extending at least 15 centimeters (6 inches) above the established ground surface at all points.
2. Pits shall be provided with a watertight, concrete floor, sloping to a drain which discharges to the ground surface at a lower elevation than the pit, and preferably at least 9 meters (30 feet) from it; or if this should be impossible, to a watertight, concrete sump, in the pit, equipped with a sump-pump discharging to the ground surface, preferably at least 9 meters (30 feet) from the pit.
3. Pits shall be provided with a concrete base for pumps or pumping machinery, so that such units shall be located at least 30 centimeters (12 inches) above the floor of the pit.
4. Pits shall be provided with a watertight housing or cover in all cases.

5. If inspection should reveal that these conditions are not being properly maintained, the supply shall be disapproved.

NOTE: The *Grade "A" PMO* permits the acceptance of pit installations on existing water supplies but prohibits the installation of well pits on new water supplies. For well pits, "existing water supplies", are those, which were in use by a producer at the time they applied for a Grade "A" permit. Therefore, pit installations, which meet the above criteria, would be acceptable. Changes in construction and extensive alterations of an existing water supply that does not affect the physical structure of the well pit does not require elimination of the well pit.

Manholes: Manholes may be provided on dug wells, reservoirs, tanks and other similar features of water supplies. A manhole, if installed, shall be provided with a curb, the top of which extends at least 10 centimeters (4 inches) above the slab and shall be equipped, where necessary for physical protection, with a locked or bolted overlapping watertight cover. The sides of which extend downward at least 5 centimeters (2 inches). The covers shall be kept closed at all times, except when it may be necessary to open the manhole.

Vent Opening: Any reservoir, well, tank or other structure containing water for the dairy water supply may be provided with vents, overflows, or water-level control gauges, which shall be so constructed as to prevent the entrance of birds, insects, dust, rodents or contaminating material of any kind. Openings on vents shall be not less than 46 centimeters (18 inches) above the floor of a pump room, or above the roof or cover of a reservoir. Vent openings on other structures shall be at least 46 centimeters (18 inches) above the surface on which the vents are located. Vent openings shall be turned down and screened with corrosion-resistant screen of not less than 16 x 20 mesh. Overflow outlets shall discharge above and not less than 15 centimeters (6 inches) from a roof, roof drain, floor, and floor drain or over an open water-supplied fixture. The overflow outlet shall be covered by a corrosion-resistant screen of not less than 16 x 20 mesh and by 0.6 centimeters (¼ inch) hardware cloth, or shall terminate in a horizontal angle seat check-valve.

DEVELOPMENT OF SPRINGS

There are two (2) general requirements necessary in the development of a spring, used as a source of domestic water:

1. Selection of a spring with adequate capacity to provide the required quantity and quality of water for its intended use throughout the year.
2. Protection of the sanitary quality of the spring. The measures taken to develop a spring must be tailored to its geological conditions and sources.

The features of a spring encasement are the following:

1. An open-bottom, watertight basin intercepting the source, which extends to bedrock or a system of collection pipes and a storage tank;
2. A cover that prevents the entrance of surface drainage or debris into the storage tank;
3. Provisions for the cleanout and emptying of the tank contents;

4. Provision for overflow; and
5. A connection to the distribution system or auxiliary supply. (Refer to Figure 12)

A tank is usually constructed in place with reinforced concrete, of such dimensions, as to enclose or intercept as much of the spring as possible. When a spring is located on a hillside, the downhill wall and sides are extended to bedrock or to a depth that will insure maintenance of an adequate water level in the tank. Supplementary cutoff walls, of concrete or impermeable clay, extending laterally from the tank may be used to assist in controlling the water table in the locality of the tank. The lower portion of the uphill wall of the tank can be constructed of stone, brick or other material, so placed that water may move freely into the tank from the formation. Backfill of graded gravel and sand will aid in restricting movement of fine material from the formation toward the tank.

The tank cover shall be cast in place to insure a good fit. Forms should be designed to allow for shrinkage of concrete and expansion of form lumber. The cover shall extend down over the top edge of the tank at least 5 centimeters (2 inches). The tank cover shall be heavy enough so that it cannot be dislodged by children and shall be equipped for locking.

A drainpipe with an exterior valve shall be placed close to the wall of the tank, near the bottom. The pipe shall extend horizontally so as to clear the normal ground level at the point of discharge by at least 15 centimeters (6 inches). The discharge end of the pipe shall be screened to prevent the entrance of rodents and insects.

The overflow is usually placed slightly below the maximum water-level elevation and screened. A drain apron of rock shall be provided to prevent soil erosion at the point of overflow discharge.

The supply outlet, from the developed spring, shall be located at least 15 centimeters (6 inches) above the drain outlet and properly screened. Care shall be taken in casting pipes into the walls of the tank to insure a good bond with the concrete and freedom from honeycombs around the pipes.

SANITARY PROTECTION OF SPRINGS

Springs usually become contaminated when barnyards, sewers, septic tanks, cesspools or other sources of pollution are located on higher adjacent land. In limestone formations however, contaminated material frequently enters the water-bearing channels through sinkholes or other large openings and may be carried along with ground water for long distances. Similarly, if material from such sources of contamination finds access to the tubular channels in glacial drift, this water may retain its contamination for long periods of time and for long distances.

The following precautionary measures will help to insure developed spring water of consistently high quality:

1. Provide for the removal of surface drainage from the site. A surface drainage ditch shall be located uphill from the source so as to intercept surface-water runoff and carry it away from the source. Location of the ditch and the points at which the water should be discharged are a matter of judgment. Criteria used should include the topography, the subsurface geology, land ownership and land use.

2. Construct a fence to prevent entry of livestock. Its location should be guided by the considerations mentioned in Item 1. The fence shall exclude livestock from the surface-water drainage system at all points uphill from the source.

3. Provide for access to the tank for maintenance, but prevent removal of the cover by a suitable locking device.
4. Monitor the quality of the spring water with periodic checks for contamination. A marked increase in turbidity or flow after a rainstorm is a good indication that surface runoff is reaching the spring.

SURFACE WATER

The selection and use of surface water sources, for individual water supply systems, require consideration of additional factors not usually associated with ground water sources. When small streams, open ponds, lakes or open reservoirs must be used as sources of a water supply, the danger of contamination and the consequent spread of enteric diseases, such as typhoid fever and dysentery is increased. As a rule, surface water shall be used only when ground water sources are not available or are inadequate. Clear water is not always safe, and the old saying that running water "purifies itself", to drinking water quality, within a stated distance is false.

The physical and bacteriological contamination of surface water makes it necessary to regard such sources of supply as unsafe for domestic use, unless reliable treatment, including filtration and disinfection, is provided.

The treatment of surface water to insure a constant, safe supply requires diligent attention to operation and maintenance by the owner of the system.

When ground water sources are limited, consideration shall be given to their development for domestic purposes only. Surface water sources can then provide water needed for stock and poultry watering, gardening, fire-fighting and similar purposes. Treatment of surface water, used for livestock, is not generally considered essential. There is however, a trend to provide stock and poultry drinking water that is free from bacterial contamination and certain chemical elements.

Where the final resort must be made to surface water for all uses, a wide variety of sources, including farm ponds, lakes, streams and the roof runoff of buildings may be considered. These sources are regarded, without exception, to be contaminated, and their use cannot be condoned unless an individually tailored treatment process can be used, which will make them safe and satisfactory. Such treatment may include aeration and the use of suitable filtration or precipitation devices to remove suspended matter, in addition to routine full-time disinfection.

The milk producer or milk plant operator, who is considering surface sources of water for milking, milkhouse and milk plant, receiving station or transfer station operations shall receive the advance approval of the Regulatory Agency and shall comply with all applicable requirements of the State Water Control Authority on the construction, protection and treatment of the chosen supply.

NOTE: The EPA publishes a document entitled *Manual of Individual Water Supply Systems* that is an excellent source of detailed information on the development, construction and operation of individual water systems and also contains a suggested well-drilling code.

III. DISINFECTION OF WATER SOURCES

All newly constructed or newly repaired wells shall be disinfected to counteract contamination introduced during construction or repair. Every well shall be disinfected immediately after construction or repair and flushed prior to bacteriological testing.

An effective and economical method of disinfecting wells and appurtenances is the use of calcium hypochlorite, containing approximately seventy percent (70%) available chlorine. This chemical can be purchased in granular form at hardware stores, swimming pool equipment supply outlets or chemical supply houses.

When used in the disinfection of wells, calcium hypochlorite should be added in sufficient amounts to provide a dosage of approximately 50 mg. available chlorine per liter (50mg/L) in the well water. This concentration is roughly equivalent to a mixture of 1 gram (0.03 ounce) of dry chemical per 13.5 liters (3.56 gallons) of water to be disinfected. A stock solution of disinfectant may be prepared by mixing 30 grams (1 ounce) of high-test hypochlorite with 1.9 liters (2 quarts) of water. Mixing is facilitated if a small amount of the water is first added to the granular calcium hypochlorite and stirred to a smooth watery paste free of lumps. The stock solution should be stirred thoroughly for ten (10) to fifteen (15) minutes. The inert ingredients should then be allowed to settle. The liquid containing the chlorine should be used and the inert material discarded. Each 1.9 liters (2 quarts) of stock solution will provide a concentration of approximately 50 mg/L when added to 378 liters (100 gallons) of water. The solution should be prepared in a clean utensil. The use of metal containers should be avoided, as they are corroded by strong chlorine solutions. Crockery, glass or rubber lined containers are recommended.

Where small quantities of disinfectant are required and a scale is not available, the material can be measured with a spoon. A heaping tablespoonful of granular calcium hypochlorite weighs approximately 14 grams (½ ounce).

When calcium hypochlorite is not available, other sources of available chlorine such as sodium hypochlorite (12-15% of volume) can be used. Sodium hypochlorite, which is also commonly available as liquid household bleach with 5.25% available chlorine, can be diluted with two (2) parts of water to produce the stock solution. 1.9 liters (2 quarts) of this solution can be used for disinfecting 378 liters (100 gallons) of water.

Stock solutions of chlorine in any form will deteriorate rapidly unless properly stored. Dark glass or plastic bottles with airtight caps are recommended. Bottles containing solution should be kept in a cool place and protected from direct sunlight. If proper storage facilities are not available, the solution should always be prepared fresh, immediately before use.

Complete information concerning the test for residual chlorine is included in the latest edition of *Standard Methods for the Examination of Water and Wastewater* (SMEWW), published by the American Public Health Association.

DUG WELLS

After the casing or lining has been completed, follow the procedure outlined below:

1. Remove all equipment and materials that will not form a permanent part of the completed structure.
2. Using a stiff broom or brush, wash the interior walls of the casing or lining with a strong solution (100 mg/L of chlorine) to insure thorough cleaning and sanitizing.

3. Place the cover over the well and pour the required amount of chlorine solution into the well through the manhole or pipe opening just before inserting the pump cylinder and drop-pipe assembly. The chlorine solution should be distributed over as much of the surface of the water as possible to obtain proper diffusion of the chemical through the water hose or pipeline, as the line is being alternately raised and lowered. This method should be followed whenever possible.
4. Wash the exterior surface of the pump cylinder and drop pipe, with the chlorine solution, as the assembly is being lowered into the well.
5. After the pump has been set in position, pump water from the well and through the entire water distribution system to the milkhouse until a strong odor of chlorine is noted.
6. Allow the chlorine solution to remain in the well for at least twenty-four (24) hours.
7. After twenty-four (24) hours or more have lapsed, flush the well to remove all traces of chlorine.

DRILLED, DRIVEN, AND BORED WELLS

After the casing or lining has been completed, follow the procedure outlined below:

1. Remove all equipment and materials that will not form a permanent part of the completed structure.
2. When the well is being tested for yield, the test pump should be operated until the well water is clear and as free from turbidity as possible.
3. After the testing equipment has been removed, slowly pour the required amount of chlorine solution into the well just before installing the permanent pumping equipment. Diffusion of the chemical with the well water may be facilitated as previously described.
4. Wash the exterior surface of the pump cylinder and drop pipe with chlorine solution as the assembly is being lowered into the well.
5. After the pump has been set in position, operate the pump until the water, discharged through the entire distribution system to waste, has a distinct odor of chlorine. Repeat this procedure a few times, at one (1) hour intervals, to insure complete circulation of the chlorine solution through the column of water in the well and the pumping equipment.
6. Allow the chlorine solution to remain in the well for at least twenty-four (24) hours.
7. After twenty-four (24) hours or more have elapsed, flush the well to remove all traces of chlorine. The pump should be operated until water discharged to waste is free from the chlorine odor.

In the case of deep wells having a high water level, it may be necessary to resort to special methods of introducing the disinfecting agent into the well so as to insure proper diffusion of chlorine throughout the well. The following method is suggested:

Place the granulated calcium hypochlorite in a short section of pipe capped at both ends. A number of small holes should be drilled through each cap or into the sides of the pipe. One (1) of the caps should be fitted with an eye to facilitate attachment of a suitable cable. The disinfecting agent is distributed when the pipe section is lowered and raised throughout the depth of the water.

WATER-BEARING STRATA

Sometimes a well is encountered that does not respond to the usual methods of disinfection. A well like this has usually been contaminated by water that entered under sufficient head to displace water into the water-bearing formation. The displaced water carries contamination with it. The contamination that has been carried into the water-bearing formation can be eliminated or reduced by forcing chlorine into the formation. Chlorine may be introduced in a number of ways, depending on the construction of the well. In some wells, it is advisable to chlorinate the water and then add a considerable volume of a chlorine solution in order to force the treated water into the formation. When this procedure is followed, all chlorinated water should have a chlorine strength of approximately 50 mg/L. In other wells, such as the drilled well cased with standard weight casing pipe, it is entirely practicable to chlorinate the water, cap the well and apply a head of air. When air is alternately applied and released, a vigorous surging effect is obtained and chlorinated water is forced into the water bearing formation. In this procedure, the chlorine strength of the treated water, in the well, will be reduced by dilution as it mixes with the water in the water-bearing formation. Therefore, it is advisable to double or triple the quantity of chlorine compound to be used so as to have a chlorine strength of 100 to 150 mg/L in the well as the surging process is started. After treating a well in this manner, it is necessary to flush it to remove the excess chlorine.

DISINFECTION OF SPRINGS

Springs and encasements should be disinfected by a procedure similar to that used for dug well. If the water pressure is not sufficient to raise the water to the top of the encasement, it may be possible to shut off the flow and thus keep the disinfectant in the encasement for twenty-four (24) hours. If the flow cannot be shut off entirely, arrangements should be made to supply disinfectant continuously for as long a period as practicable.

DISINFECTION OF WATER DISTRIBUTION SYSTEMS

These instructions cover the disinfection of water distribution systems and attendant standpipes or tanks. It is always necessary to disinfect a water system before placing it in use under the following conditions:

1. Disinfection of a system that has been in service with raw or polluted water, preparatory to transferring the service to treated water.
2. Disinfection of a new system upon completion and preparatory to placing in operation with treated water or water of satisfactory quality.
3. Disinfection of a system after completion of maintenance and repair operations.

The entire system, including tank or standpipe, should be thoroughly flushed with water to remove any sediment that may have collected during operation with raw water. Following flushing, the system should be filled with a disinfecting solution of calcium hypochlorite and treated water. This solution is prepared by adding 550 grams (1.2 pounds) of high-test 70% calcium hypochlorite to each 3,785 liters (1,000 gallons) of water. A mixture of this kind provides a solution having not less than 100 mg/L of available chlorine.

The disinfectant should be retained in the system, tank or standpipe, if included, for not less than twenty-four (24) hours, then examined for residual chlorine and drained out. If no residual chlorine is found present, the process should be repeated. The system is next flushed with treated water and put into operation.

IV. CONTINUOUS WATER DISINFECTION

Water supplies which are otherwise deemed satisfactory, but which prove unable to meet the bacteriological standards prescribed herein, shall be subjected to continuous disinfection. The individual character of the supply shall be investigated and a treatment program developed, which shall produce a safe supply as determined by bacteriological testing.
For numerous reasons, including economy, effectiveness, stability, ease of use and availability, chlorine is by far the most popular chemical agent employed for the disinfection of water supplies. This does not preclude the use of other chemicals or procedures demonstrated to be safe and effective. The amount necessary to provide adequate protection varies with the supply and the amount of organic and other oxidizable material that it contains. Proper disinfection can only be assured when a residual concentration of chlorine remains, for bactericidal activity, after the demands of these other substances are met. In general, these factors exert the most important influences on the bactericidal efficiency of chlorine:

1. Free chlorine residual; the higher the residual, the more effective the disinfection and the faster the disinfection rate.
2. Contact time between the organism and the disinfectant; the longer the time, the more effective the disinfection.
3. Temperature of the water in which contact is made; the lower the temperature, the less effective the disinfection.
4. The pH of the water in which contact is made; the higher the pH, the less effective disinfection.

For example, when a high pH and low temperature combination is encountered in a water, either the concentration of chlorine or the contact time must be increased. Likewise, chlorine residual will need to be increased if sufficient contact time is not available in the distribution system before the water reaches the first user.

SUPERCHLORINATION – DECHLORINATION

Superchlorination: The technique of superchlorination involves the use of an excessive amount of chlorine to destroy quickly the harmful organisms that may be present in the water. If an excessive amount of chlorine is used, free chlorine residual will be present. When the quantity of chlorine is increased, disinfection is faster and the amount of contact time required insuring safe water is decreased.

De-chlorination: The de-chlorination process may be described as the partial or complete reduction of any chlorine present in the water. When de-chlorination is provided in conjunction with proper superchlorination, the water will be both properly disinfected and acceptable to the consumer for domestic or culinary uses.

De-chlorination can be accomplished in individual water systems by the use of activated carbon, de-chlorinating filters. Chemical de-chlorination by reducing agents such as sulphur dioxide or sodium thiosulfate can be used for batch de-chlorination. Sodium thiosulfate is also used to de-chlorinate water samples prior to submission for bacteriological examination.

DISINFECTION EQUIPMENT

Hypochlorinators are the most commonly employed equipment for the chemical elimination of bacteriological contamination. They operate by pumping or injecting a chlorine solution into the water. When properly maintained, hypo-chlorinators provide a reliable method for applying chlorine to disinfect water.

Types of hypo-chlorinators include positive displacement feeders, aspirator feeders, suction feeders and tablet hypo-chlorinators.

This equipment can be readily adapted to meet the needs of other systems of treatment, which require the regulated discharge of a solution into the supply.

Positive Displacement Feeders: A common type of positive displacement hypo-chlorinator is one (1) that uses a piston or diaphragm pump to inject the solution. This type of equipment, which is adjustable during operation, can be designed to give reliable and accurate feed rates. When electricity is available, the stopping and starting of the hypo-chlorinator can be synchronized with the pumping unit. A hypo-chlorinator of this kind can be used with any water system. However, it is especially desirable in systems where water pressure is low and fluctuating.

Aspirator Feeders: The aspirator feeder operates on a simple hydraulic principle that employs the use of the vacuum created when water flows either through a venturi tube or perpendicular to a nozzle. The vacuum created, draws the chlorine solution from a container into the chlorinator unit where it is mixed with water passing through the unit and the solution is then injected into the water system. In most cases, the water inlet line to the chlorinator is connected to receive water from the discharge side of the water pump, with the chlorine solution being injected back into the suction side of the same pump. The chlorinator operates only when the pump is operating. Solution flow rate is regulated by means of a control valve; pressure variations are known to cause changes in the feed rate.

Suction Feeders: One (1) type of suction feeder consists of a single line that runs from the chlorine solution container, through the chlorinator unit and connects to the suction side of the pump. The chlorine solution is pulled from the container by suction created by the operating water pump.

Another type of suction feeder operates on the siphon principle, with the chlorine solution being introduced directly into the well. This type also consists of a single line, but the line terminates in the well below the water surface instead of the influent side of the water pump. When the pump is operating, the chlorinator is activated so that a valve is opened and the chlorine solution is passed into the well.

Tablet Chlorinator: These hypo-chlorinators inject water into a bed of concentrated calcium hypochlorite tablets. The result is metered into the pump suction line.

V. WATER RECLAIMED FROM MILK AND MILK PRODUCTS

Water reclaimed from Grade "A" milk and milk products may be reused in a milk plant. Water reclaimed from non-Grade "A" milk and milk products may also be reused in a milk plant provided that the design and operation of the equipment used to reclaim water meets the requirements of this Ordinance. The three (3) general categories for reclaimed water use are:

Category I. Reclaimed water, which may be used for all potable water purposes, including the production of culinary steam.
Category II. Reclaimed water, which may be used for limited purposes, including the production of culinary steam.
Category III. Use of reclaimed water not meeting the requirements of this Section.

Reclaimed water used in regenerative heat exchange systems prior to storage may be reused for Category II and III purposes. Water from regenerative heat exchange systems may also be reclaimed and used for Category II and III purposes.

CATEGORY I. USED FOR POTABLE WATER PURPOSES

Reclaimed water to be used for potable water purposes, including the production of culinary steam, shall meet the following requirements:

1. Water shall comply with the Bacteriological Standards of Appendix G., and, in addition, shall not exceed a total plate count of 500 per milliliter (500/mL).
2. Samples shall be collected daily for two (2) weeks following initial approval of the installation and semi-annually thereafter. Provided, that daily tests shall be conducted for one (1) week following any repairs or alteration to the system.
3. The organic content shall be less than 12 mg/L as measured by the chemical oxygen demand or permanganate-consumed test; or a standard turbidity of less than five (5) units.
4. Automatic fail-safe monitoring devices shall be used to monitor and automatically divert, to the sewer, any water that exceeds the standard.
5. The water shall be of satisfactory organoleptic quality and shall have no off-flavors, odors or slime formations.
6. The water shall be sampled and tested organoleptically at weekly intervals.
7. Approved chemicals, such as chlorine, with a suitable detention period, may be used to suppress the development of bacterial growth and prevent the development of tastes and odors.
8. The addition of chemicals shall be by an automatic proportioning device, prior to the water entering the storage tank, to assure satisfactory quality water in the storage tank at all times.
9. When chemicals are added, a daily testing program for such added chemicals shall be in effect and such chemicals shall not add substances that will prove deleterious to the use of the water or contribute to product contamination.
10. The storage vessel shall be properly constructed of such material that it will not contaminate the water and can be satisfactorily cleaned.
11. The distribution system, within a milk plant, for such reclaimed water shall be a separate system with no cross-connections to a municipal or private water system.

12. All physical, chemical and microbiological tests shall be conducted in accordance with the latest edition of *SMEW*.

CATEGORY II. USED FOR LIMITED PURPOSES

Reclaimed water may be used for limited purposes including:

1. Production of culinary steam.
2. Pre-rinsing of the product surfaces where pre-rinses will not be used in milk or milk products.
3. Cleaning solution make-up water.

Provided that for these uses, Items 3-11 of Category I are satisfied and:

1. There is no carry-over of water from one (1) day to the next, and any water collected is used promptly; or
   a. The temperature of all water in the storage and distribution system is maintained at 63ºC (145ºF) or higher by automatic means; or
   b. The water is treated with a suitable, approved chemical to suppress bacterial propagation by means of an automatic proportioning device, prior to the water entering the storage tank; and that,
2. Distribution lines and hose stations are clearly identified as "limited use reclaimed water"; and
3. Water handling practices and guidelines are clearly described and prominently displayed at appropriate locations within the milk plant; and
4. These water lines are not permanently connected to product vessels, without a break to the atmosphere and sufficient automatic controls, to prevent the inadvertent addition of this water to product streams.

CATEGORY III. USE OF RECLAIMED WATER NOT MEETING THE REQUIREMENTS OF THIS SECTION

Reclaimed water not meeting the requirements of this Section may be used as feed-water for boilers, not used for generating culinary steam, or in a thick, double walled, enclosed heat exchanger.

VI. WATER RECLAIMED FROM HEAT EXCHANGER PROCESSES

Potable water utilized for heat exchange purposes in plate or other type heat exchangers or compressors on Grade “A” dairy farms may be salvaged for the milking operation if the following criteria are met:

1. The water shall be stored in a storage vessel properly constructed of such material that it will not contaminate the water and be designed to protect the water supply from possible contamination.
2. The storage vessel shall be equipped with a drain and access point to allow for cleaning.

3. No cross-connection shall exist between this supply and any unsafe or questionable water supply or any other source of pollution.
4. There are no submerged inlets through which this supply may be contaminated.
5. The water shall be of satisfactory organoleptic quality and shall have no off-flavors or odors.
6. The water shall comply with the Bacteriological Standards of Appendix G.
7. Samples shall be collected and analyzed prior to initial approval and semi-annually thereafter.
8. Approved chemicals, such as chlorine, with a suitable retention period, may be used to suppress the development of bacterial growth and prevent the development of tastes and odors.
9. When chemicals are added, a monitoring program for such added chemicals shall be in effect and such chemicals shall not add substances that will prove deleterious to the use of the water or contribute to product contamination.
10. If the water is to be used for the sanitizing of teats or equipment, backflush systems, approved sanitizers, such as iodine, may be added by an automatic proportioning device, located downstream from the storage vessel but prior to its end-use application.

NOTE: Water from the current milking, obtained directly from the discharge of a raw milk heat exchanger, may be utilized for the one (1) time, pre-rinsing of dairy equipment or for non-potable uses. This heat exchange water may be used if:

1. The water is used for the one (1) time pre-rinsing of milking equipment, including milk lines, milking claw assembly, milk receiver, etc., and discharged to waste.
2. The water is collected directly from the plate heat exchanger into the wash vat or utensil sink.
3. The water piping system shall meet the requirements of Item 8r of this *Ordinance*.

VII. DRAWINGS OF CONSTRUCTION DETAILS FOR WATER SOURCES

NOTE: The following Figures 8-25 are taken from *The Manual of Individual Water Supply Systems,* EPA publication number EPA-430-9-73-003.

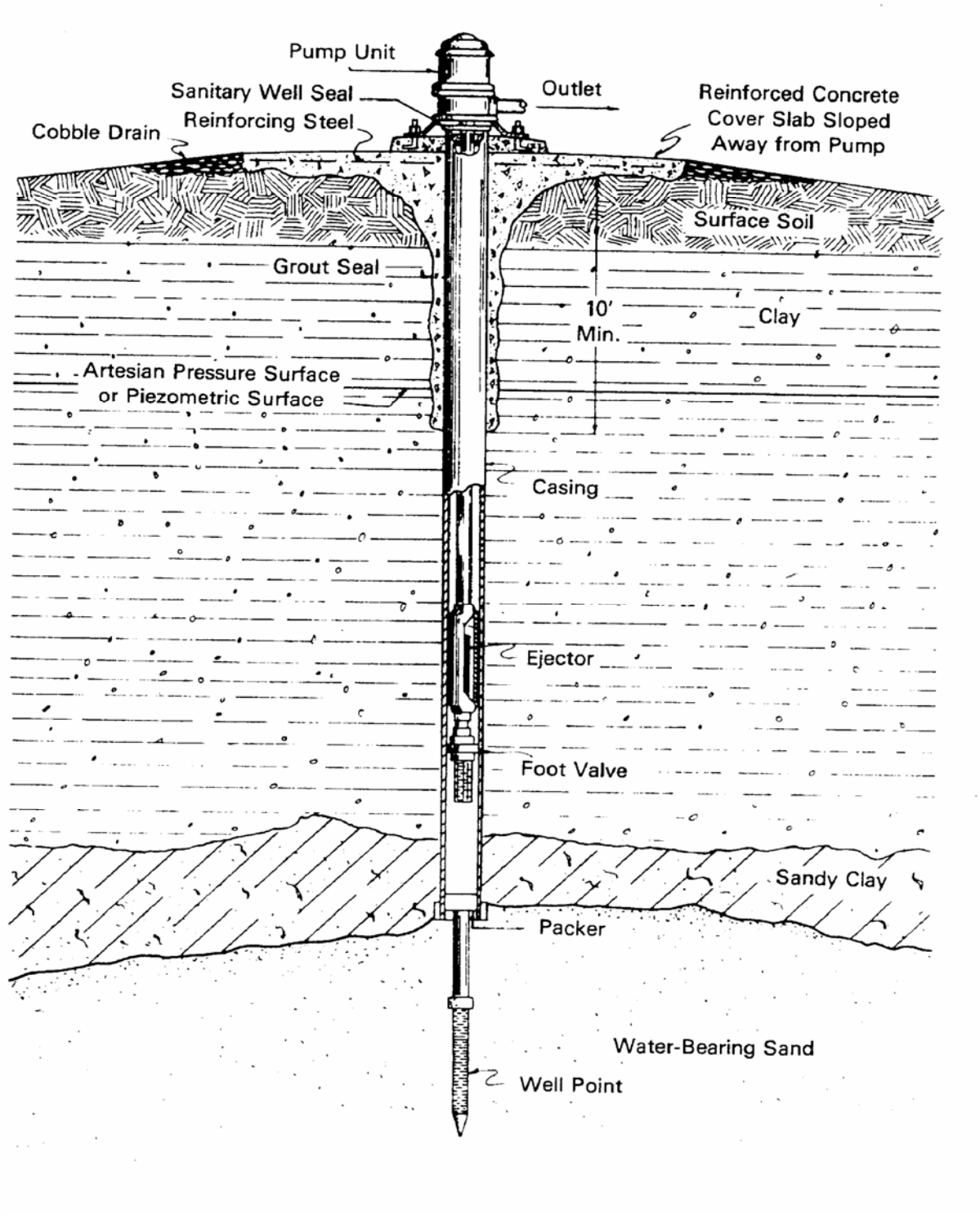

Figure 8. Bored Well with Driven Well Point

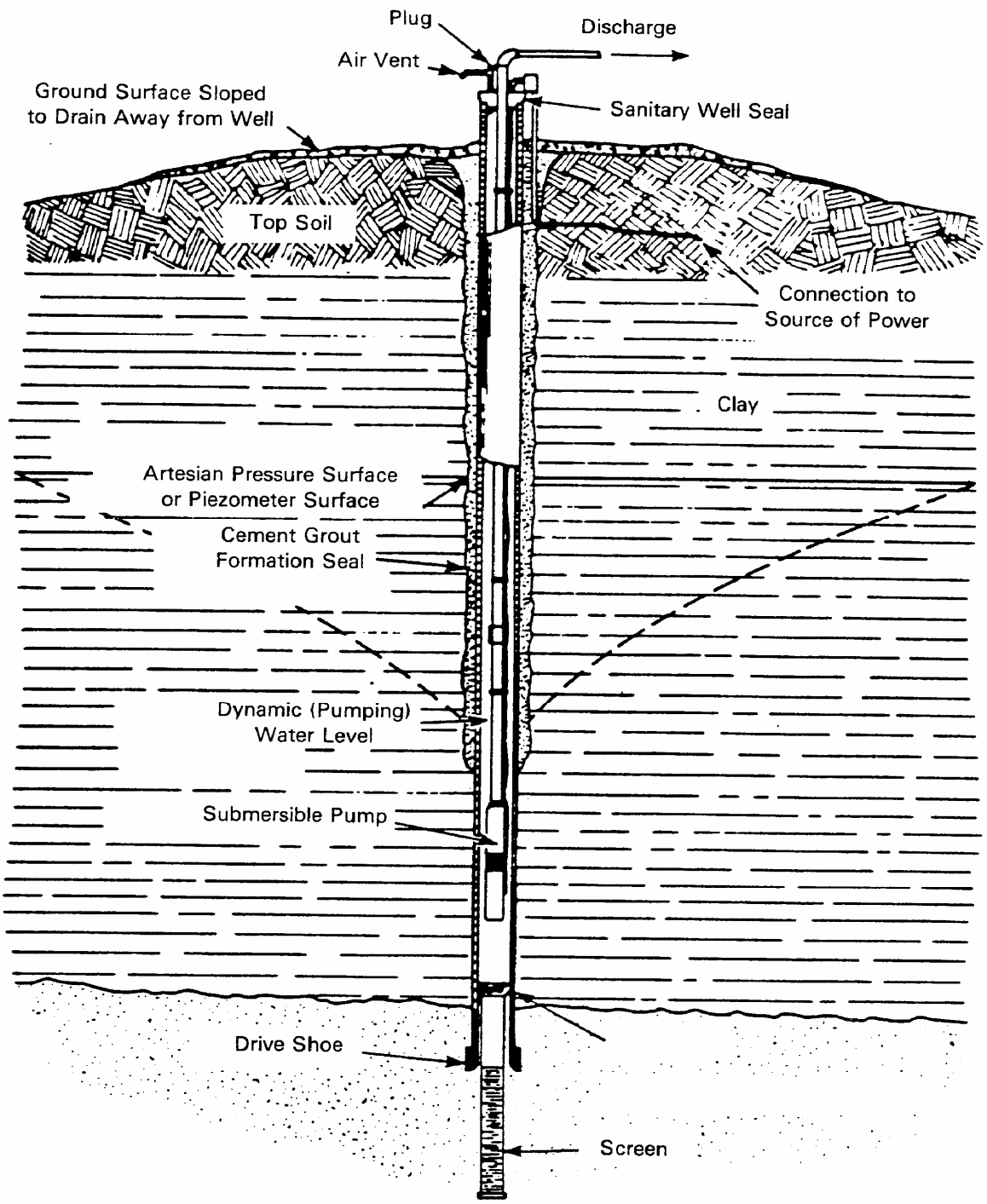

Figure 9. Drilled Well with Submersible Pump

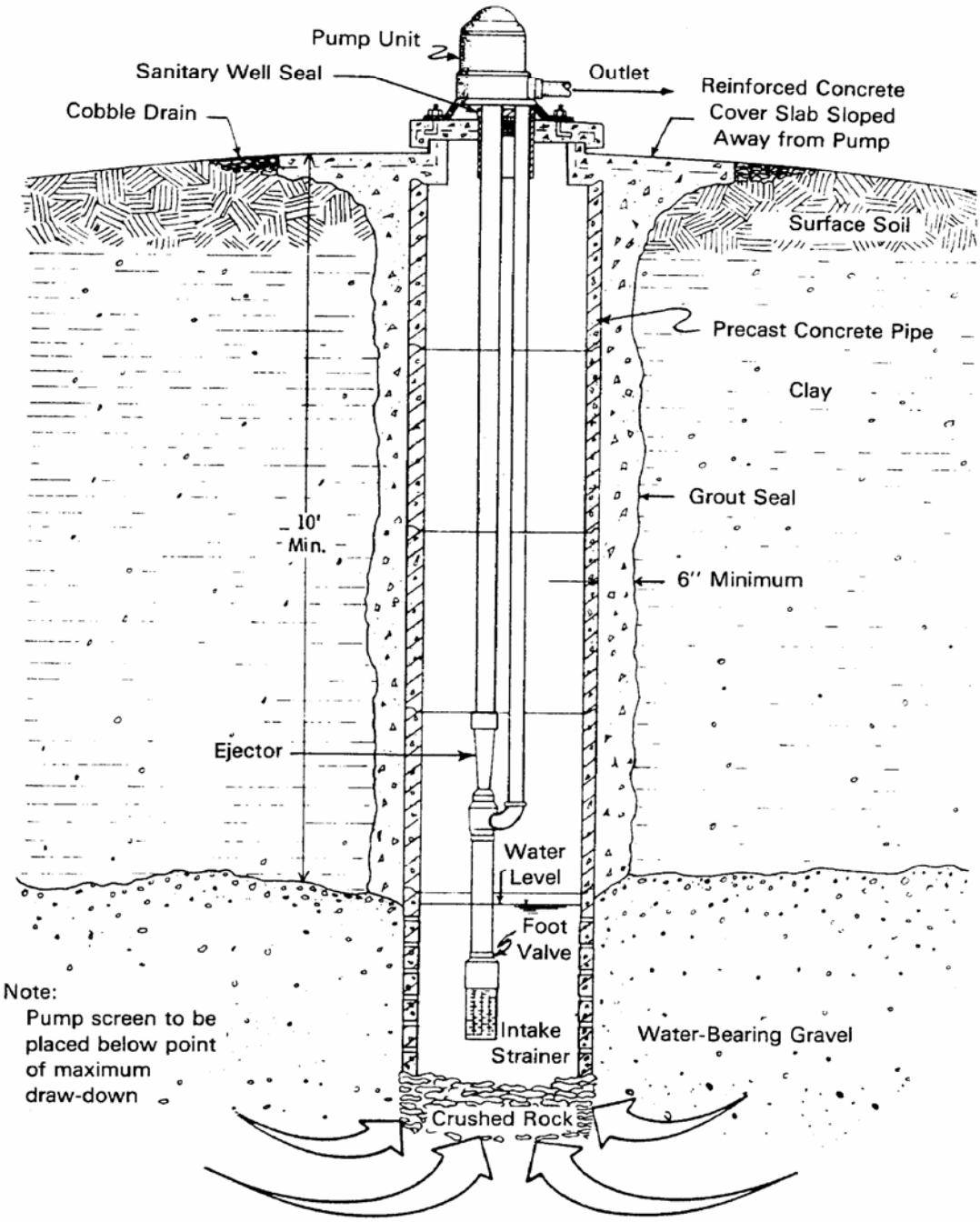

Figure 10. Dug Well with Two-Pipe Jet Pump Installation

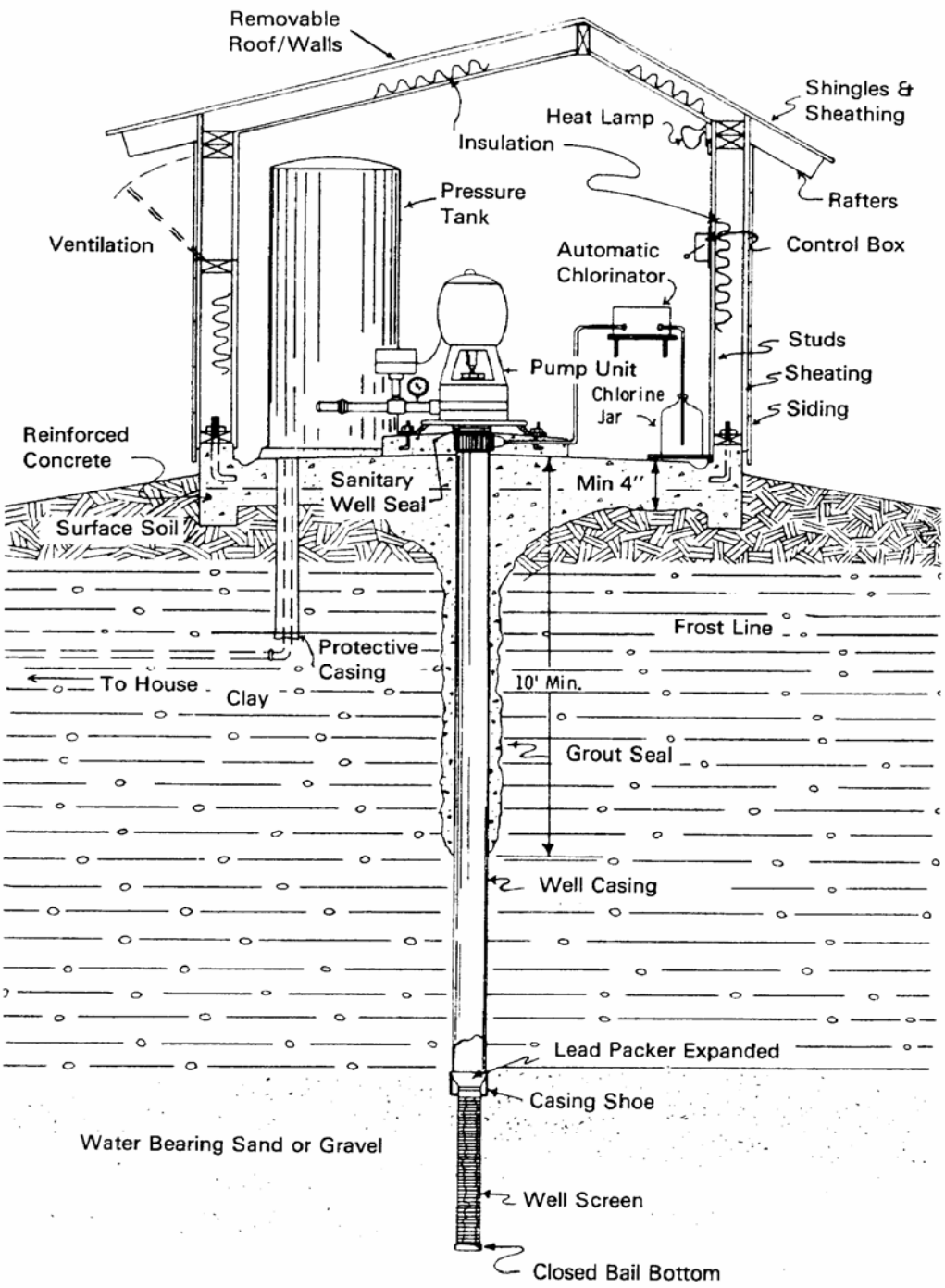

Figure 11. Pumphouse

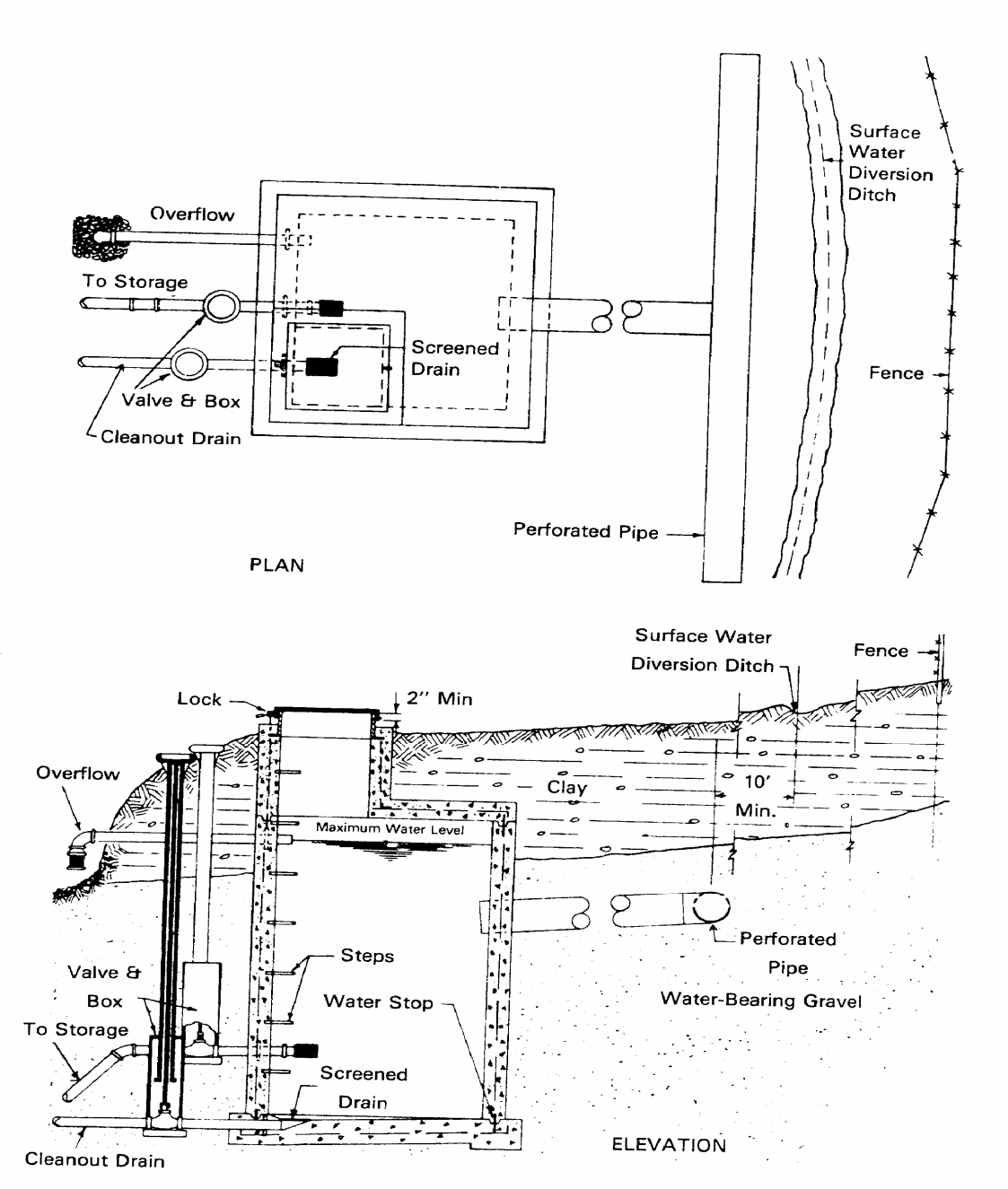

Figure 12. Spring Protection

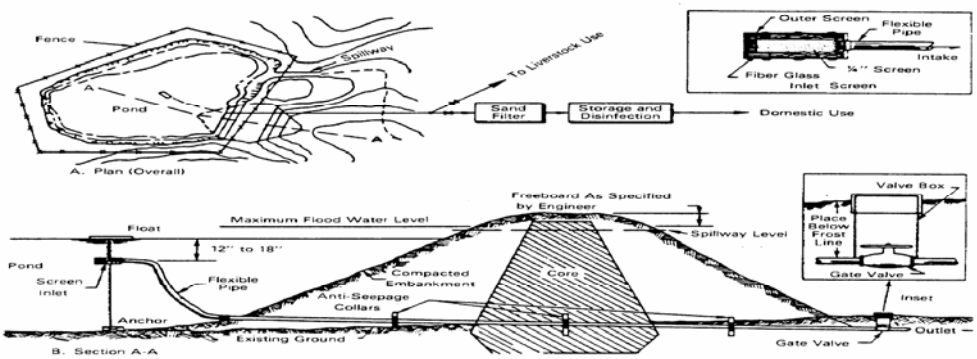

Figure 13. Pond

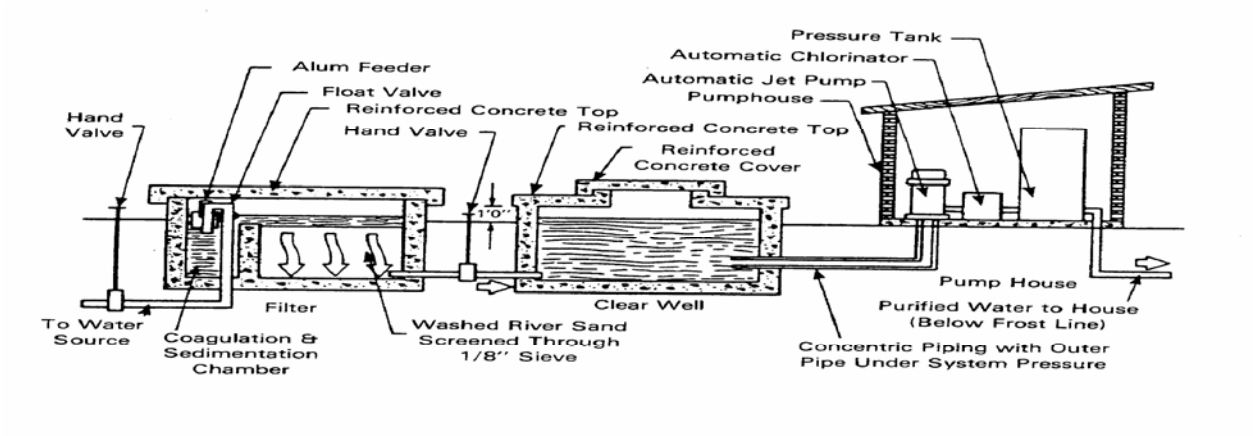

Figure 14. Schematic Diagram of a Pond Water-Treatment System

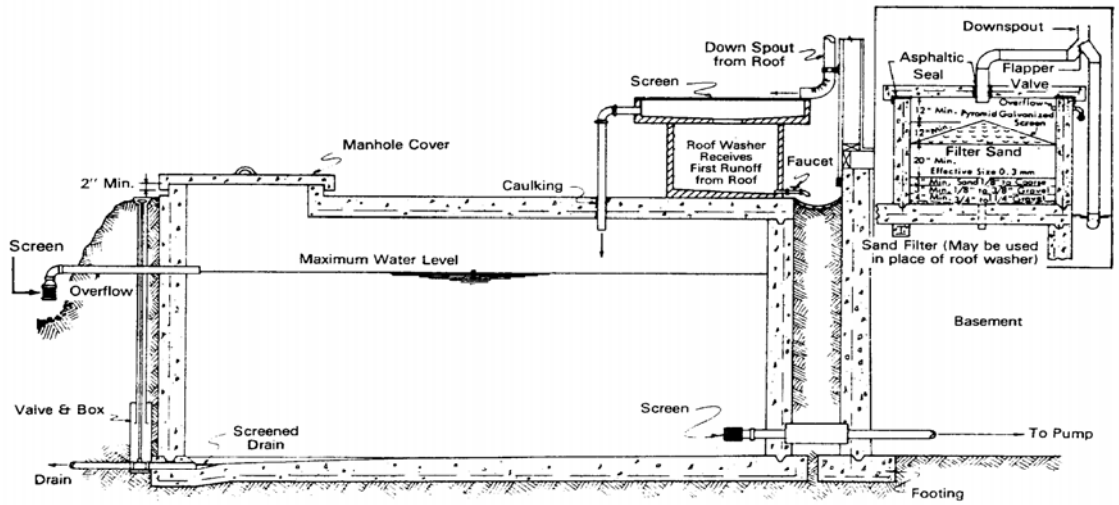

Figure 15. Cistern

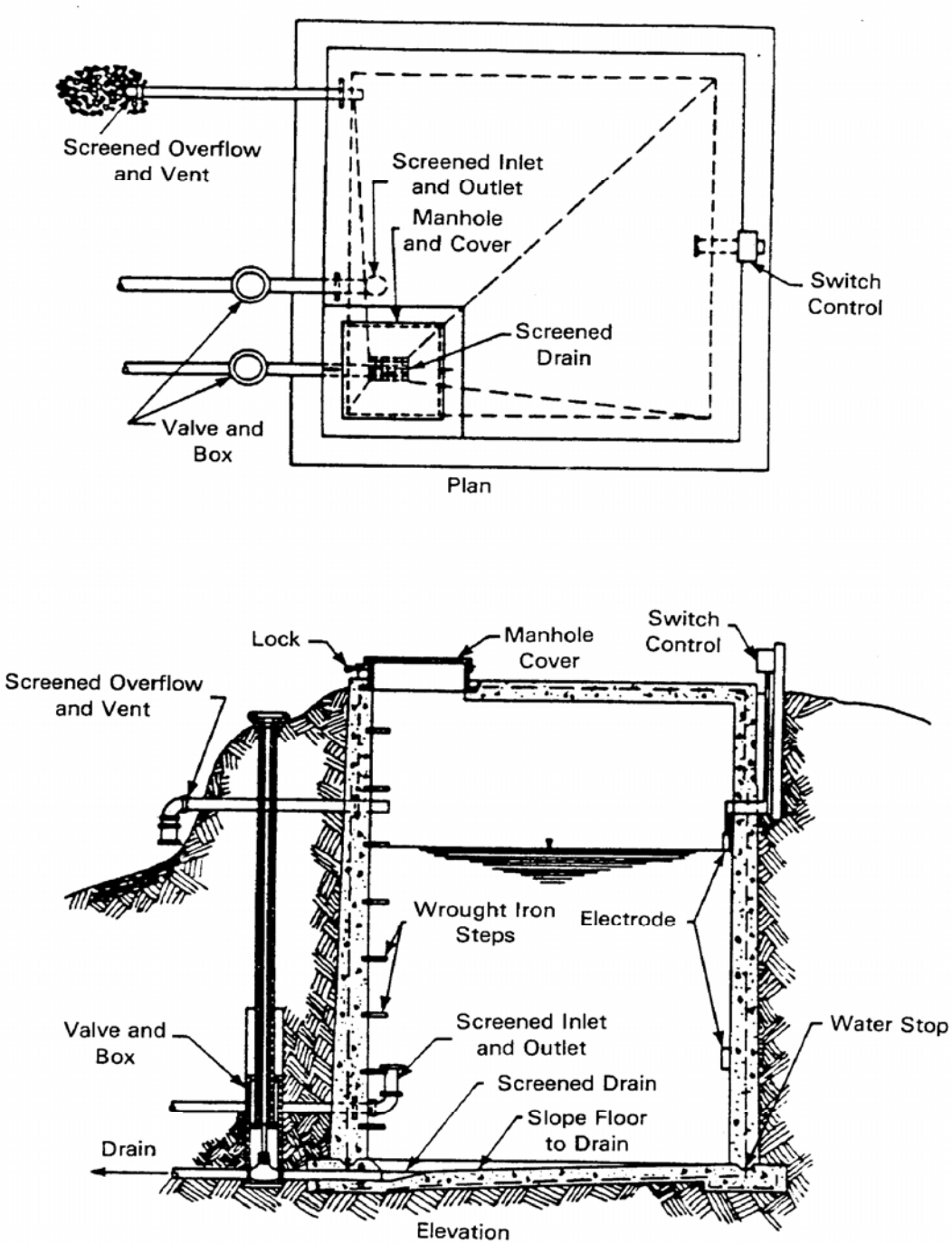

Figure 16. Typical Concrete Reservoir

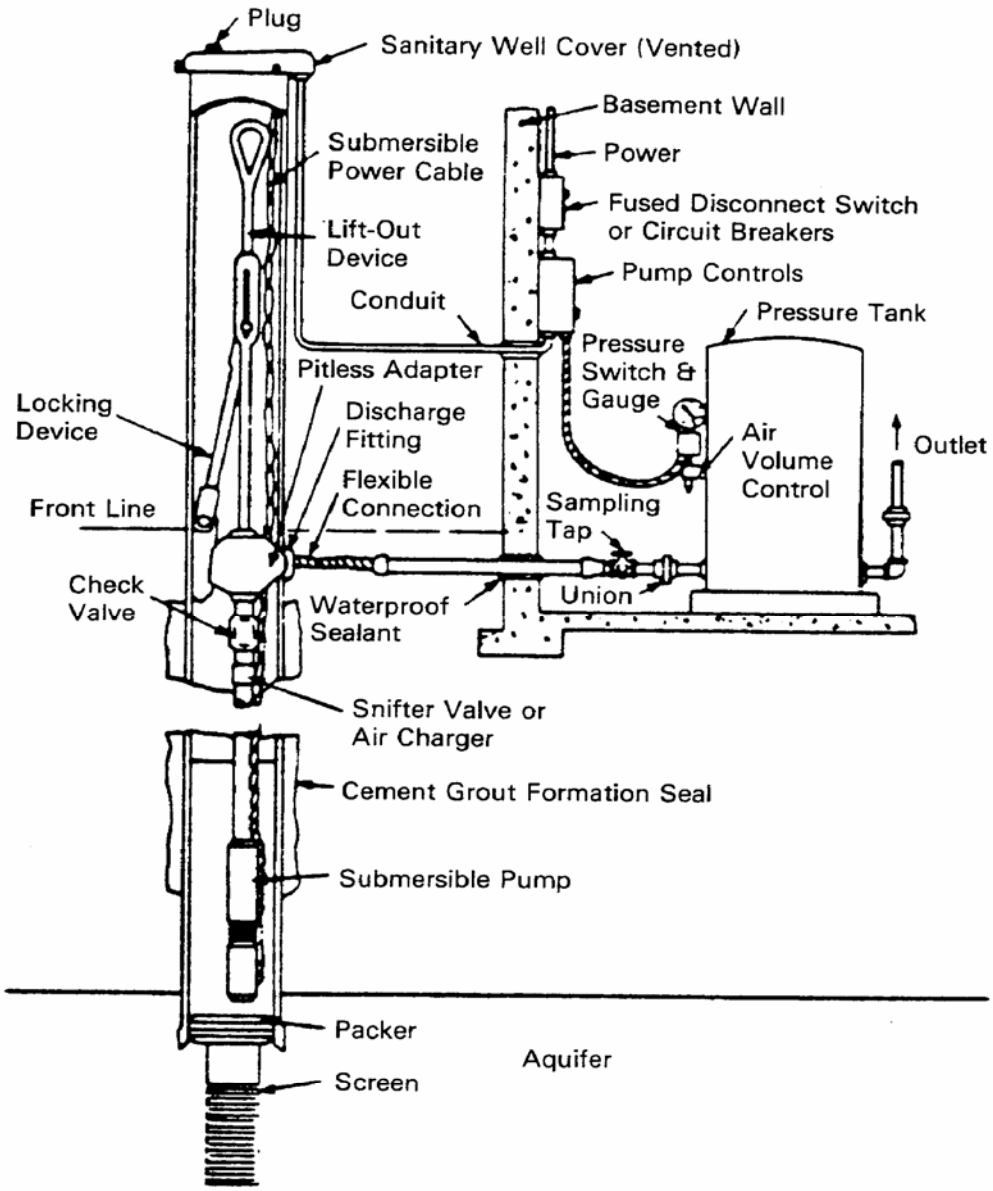

Figure 17. Pit-less Adapter with Submersible Pump Installation for Basement Storage

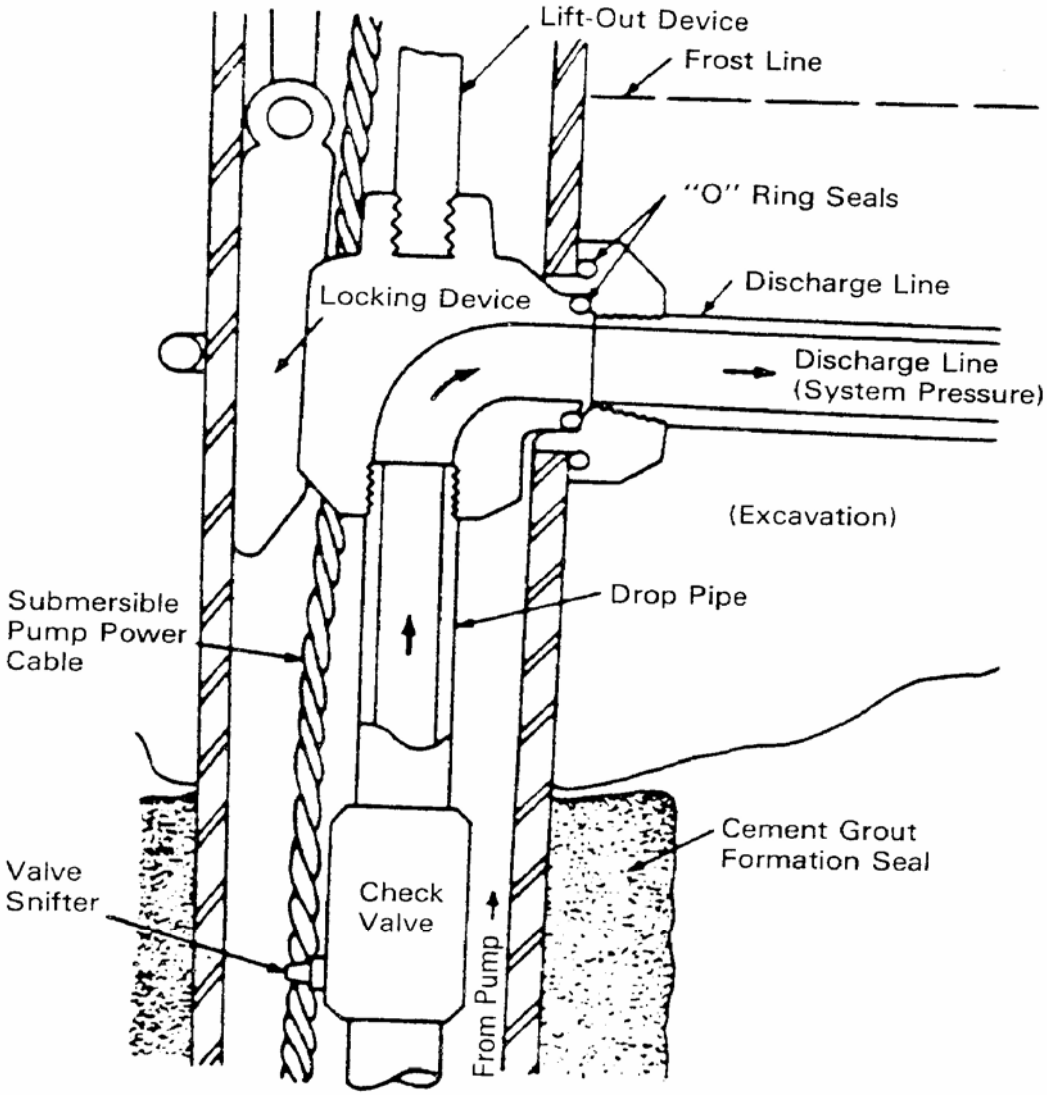

Figure 18. Clamp-on Pit-less Adapter with Concentric External Piping for "Shallow Well" Pump Installation

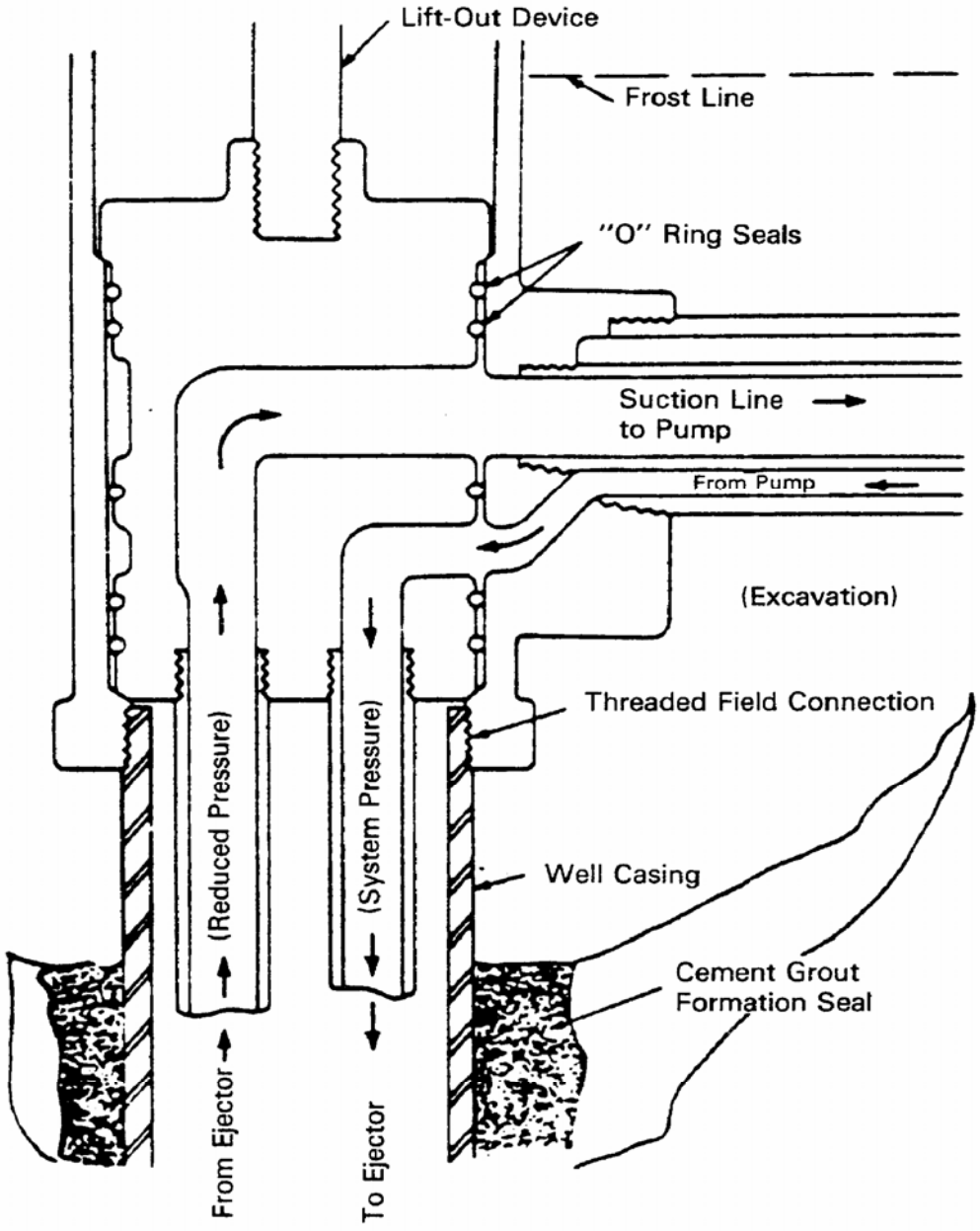

Figure 19. Pit-less Unit with Concentric External Piping for Jet Pump Installation

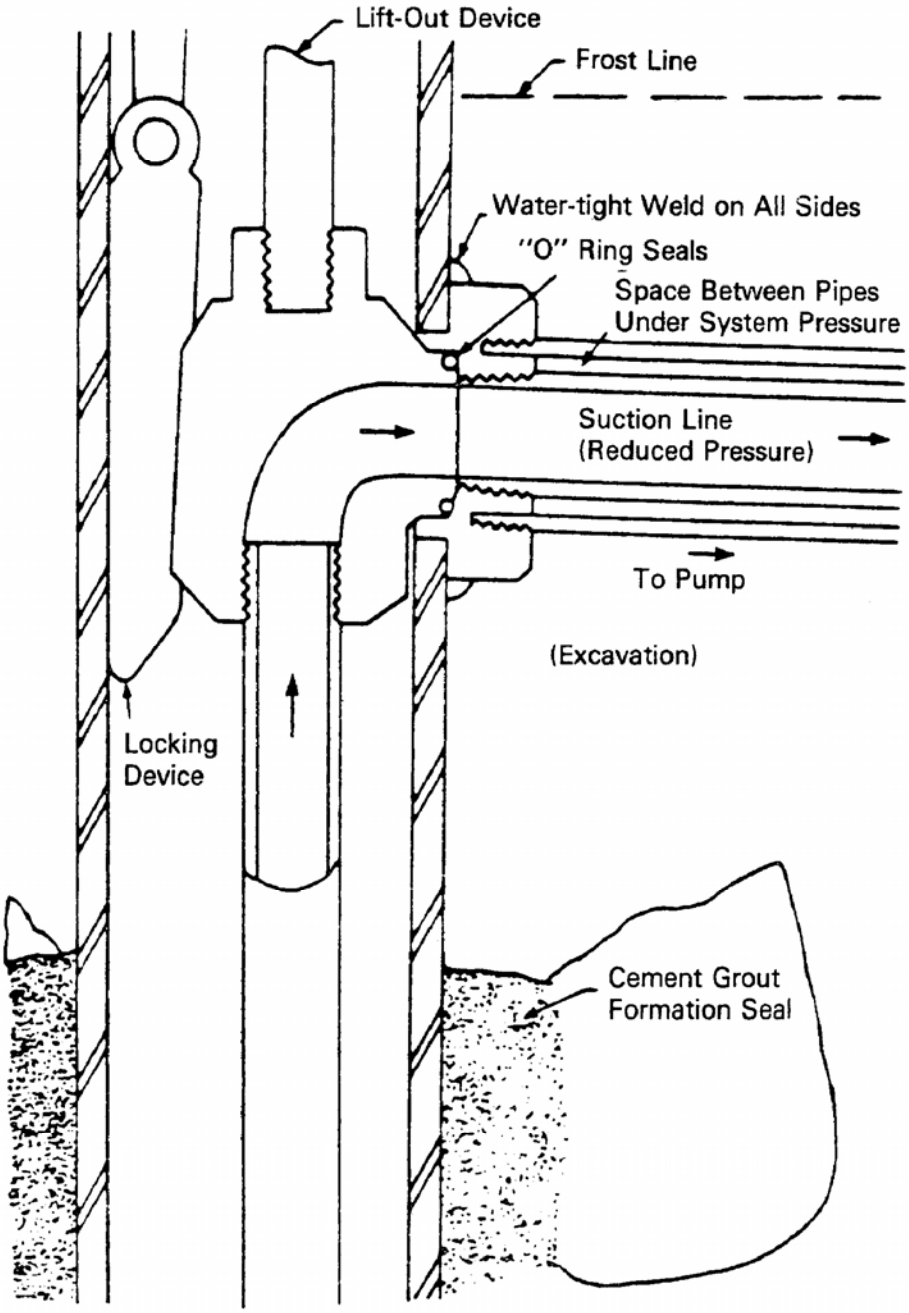

Figure 20. Weld-on Pit-less Adapter with Concentric External Piping for "Shallow Well" Pump Installation

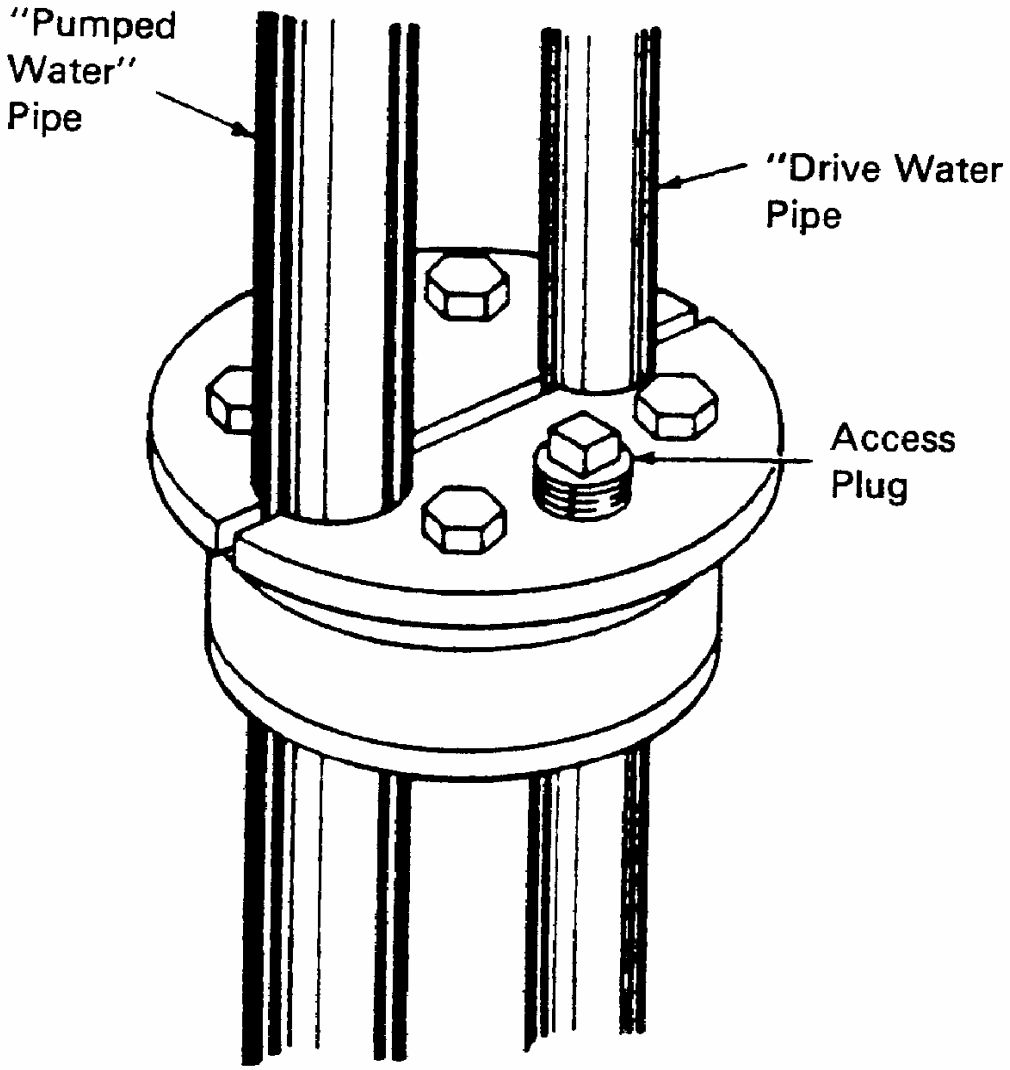

Figure 21. Well Seal for Jet Pump Installation

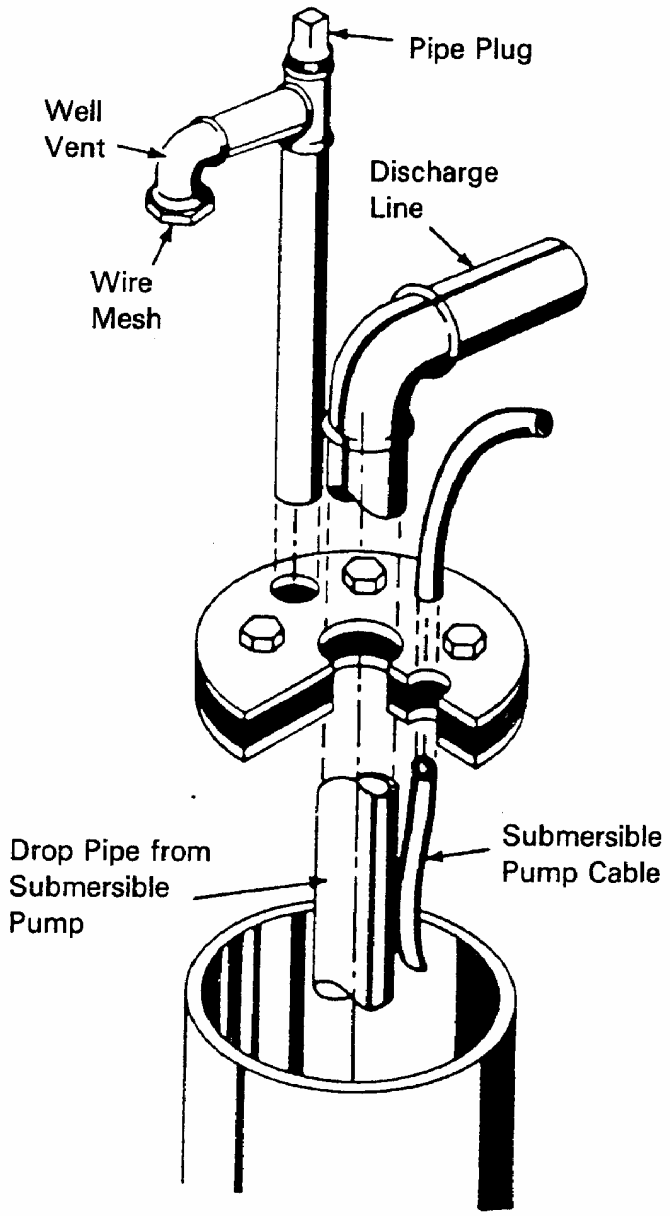

Figure 22. Well Seal for Submersible Pump Installation

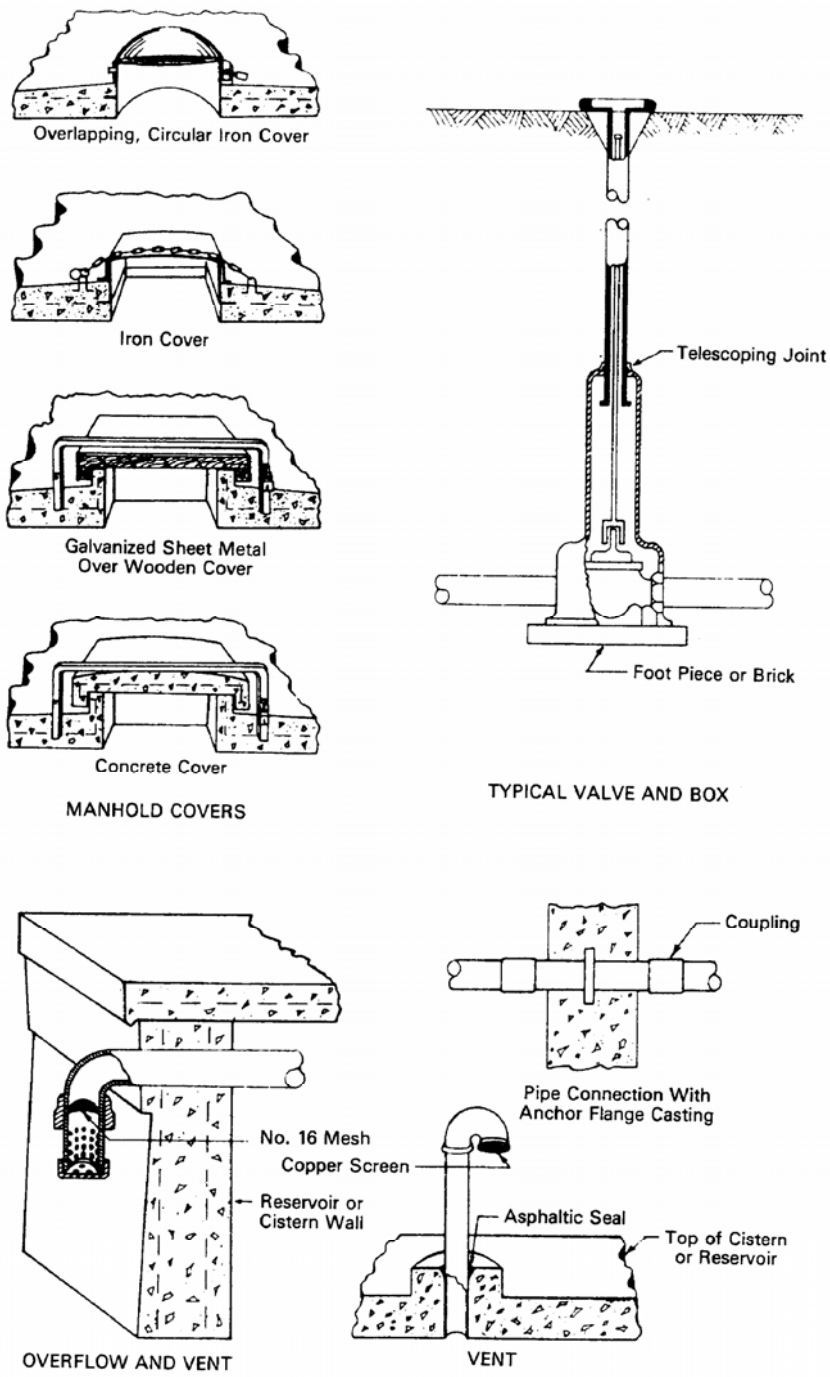

Figure 23. Typical Valve and Box, Manhole Covers, and Piping Installation

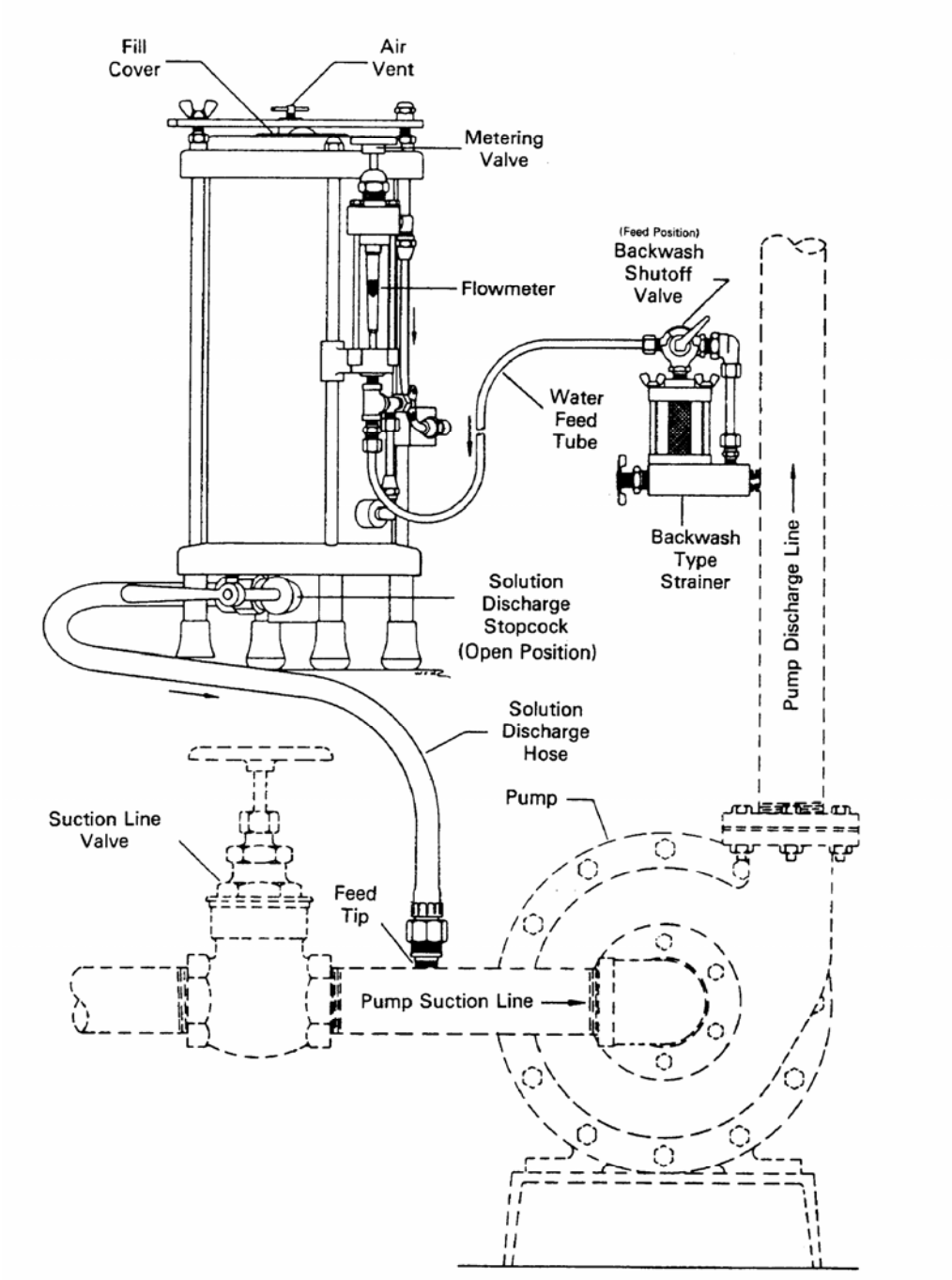

Figure 24. Suction Feeder

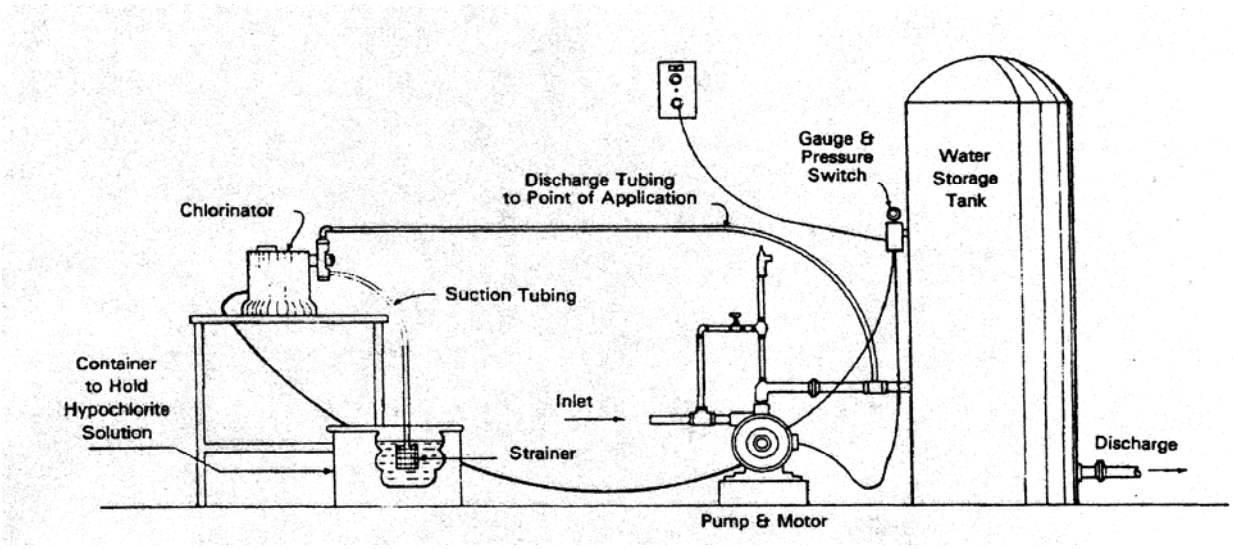

Figure 25. Positive Displacement Chlorinator

APPENDIX E. EXAMPLES OF 3-OUT-OF-5 COMPLIANCE ENFORCEMENT PROCEDURES

The following Tables provide several useful examples in the application of the enforcement system described in Section 6. While the illustrations given, relate only to pasteurized milk bacterial counts and somatic cell counts of raw milk, the method is applied, in like fashion, to the enforcement of established standards for cooling temperature, coliform limits, etc. Pasteurized milk or milk product that shows a positive phosphatase reaction and milk or milk product, in which the presence of drug residue, pesticides or other adulterants is found, shall be dealt with as indicated in Sections 2 and 6, respectively.

Table 11. Example of Enforcement Procedures for Pasteurized Milk Laboratory Examinations

Date	Bacterial Count per mL	Enforcement Action as Applied to a Standard of 20,000/mL
1/05/05	6,000	No Action Required
1/28/05	11,000	No Action Required
2/11/05	12,000	No Action Required
3/15/05	22,000	Violative; No Action Required
3/25/05	23,000	Violative; Written notice to the milk plant, 2 of last 4 counts exceed the standard. (This notice shall be in effect as long as 2 of the last 4 consecutive samples exceed the standard). Additional sample required within 21 days from the date of the notice, but not before the lapse of three (3) days.
4/02/05	9,000	No Action Required
4/19/05	51,000	Violative (3 of last 5 counts exceed the standard); Required Regulatory Actions: 1. Suspend the milk plant permit; or 2. Forego permit suspension, provided the milk or milk product(s) in violation are not sold as Grade "A" milk or milk product(s); or 3. Impose monetary penalty in lieu of permit suspension, provided the milk or milk product(s) in violation are not sold as Grade "A" milk or milk product(s).
4/23/05		Issue temporary permit (if applicable) after a milk plant inspection. Begin accelerated sampling schedule.
4/25/05	11,000	No Action Required
4/29/05	3,000	No Action Required
5/4/05	22,000	Violative; No Action Required **NOTE:** Samples collected prior to 4/23/05 are not used for subsequent bacterial count enforcement purposes.
5/9/05	5,000	Permit Fully Reinstated

Table 12. Example of Enforcement Procedures for Raw Milk Laboratory Examinations

Date	Confirmed Somatic Cell Counts per mL	Enforcement Action as Applied to a Standard of 750,000 per mL
7/10/05	500,000	No Action Required
8/15/05	600,000	No Action Required
10/1/05	800,000	Violative; No Action Required
11/7/05	900,000	Violative; Written notice to producer, 2 of last 4 counts exceed the standard. (This notice shall be in effect as long as 2 of the last 4 consecutive samples exceed the standard). Additional sample required within 21 days from the date of the notice, but not before the lapse of three (3) days.
11/14/05	1,200,000	Violative (3 of last 5 counts exceed the standard); Required Regulatory Actions: 1. Suspend producer permit; or 2. Forego permit suspension, provided the milk in violation is not sold as Grade "A"; or 3. Impose monetary penalty in lieu of permit suspension, provided the milk in violation is not sold or offered for sale as Grade "A" product. Except that a milk producer may be assessed a monetary penalty in lieu of permit suspension for violative counts provided: If the monetary penalty is due to a violation of the somatic cell count standard, the Regulatory Agency shall verify that the milk supply is within acceptable limits as prescribed in Section 7 of this *Ordinance*. Samples shall then be taken at the rate of not more than two (2) per week on separate days within a three (3) week period in order to determine compliance with the appropriate standard as determined in accordance with Section 6 of this *Ordinance*. (Refer to Section 3)
11/18/05	700,000	Issue temporary permit (if applicable) after sampling indicates the milk is within the standards prescribed in Section 7. Begin accelerated sampling schedule.
11/20/05	800,000	Violative; No Action Required **NOTE:** Samples collected prior to 11/18/05 are not used for subsequent somatic cell count enforcement purposes.
11/24/05	700,000	No Action Required
11/29/05	550,000	No Action Required
12/3/05	400,000	Permit Fully Reinstated

APPENDIX F. SANITIZATION

I. METHODS OF SANITIZATION

CHEMICAL

Certain chemical compounds are effective for the sanitization of milk containers, utensils and equipment. These are contained in 21 CFR 178.1010 and shall be used in accordance with label directions.

STEAM

When steam is used, each group of assembled piping shall be treated separately by inserting the steam hose into the inlet and maintaining steam flow from the outlet for at least five (5) minutes after the temperature of the drainage at the outlet has reached 94ºC (200ºF). The period of exposure required here is longer than that required for individual cans, because of the heat lost through the large surface exposed to the air. Covers must be in place during treatment.

HOT WATER

Hot water may be used by pumping it through the inlet, if the temperature at the outlet end of the assembly is maintained to at least 77ºC (170ºF) for at least five (5) minutes.

II. EVAPORATING, DRYING AND DRY PRODUCT EQUIPMENT CLEANING

CLEANING

1. **Cleaning or Evaporators and Condensers:** Some evaporators are designed so that the milk or milk product is exposed to large surface areas for a long period of time at temperatures conducive to the growth of microorganisms.
Pipelines and/or equipment designed for automated mechanical cleaning of evaporators should meet the following requirements:

   a. A pH recording device should be installed in the return solution line to record the pH and time, which the line or equipment is exposed during the cleaning and sanitizing operation.
   b. These pH recording charts should be identified, dated, and retained for three (3) months.
   c. During each official inspection the Regulatory Agency should examine and initial the pH recording charts to verify the time of exposure to the cleaning solutions and their pH.

The following are suggested procedures for cleaning and sanitizing evaporators and condensers:

The surface area inside an evaporator is extremely large. Not only is there a large separator chamber and vapor lines but steam chests may also have as many as 500 to 1400 heating tubes from three (3) to fifteen (15) meters (ten (10) to fifty (50) feet) long. The total surface area may be 4,000 to 35,000 square feet, which may require large volumes for recirculation. This surface area must be cleaned and sanitized carefully or it will contaminate the milk or milk product. The

operating temperatures in an evaporator are very close to the growing temperatures of thermoduric and certain mesophilic types of bacteria. The first effect may operate at 60°C (140°F) to 77°C (170°F), the second effect at 52°C (125°F) to 63°C (145°F), and the third effect at 38°C (100°F) to 49°C (120°F). The product being evaporated is often recirculated in the last effect several times until the right concentration is reached, which may give bacteria ample time to grow. A clean evaporator operates more efficiently. It is necessary to clean the evaporators after long periods of operations because burned-on material reduces heat transfer and efficiency. A point is reached where it will be more economical to stop and clean up than to continue to operate. Evaporators need cleaning for sanitary reasons as well as for efficient operation. Tube chests and heating plates must be cleaned to get good heat transfer. If vapor lines are not cleaned, it is possible to get a back surge of vapor when the vacuum is released. This can carry soil back into the milk or milk product thus lowering the quality. This soil may drop into the thermo-compression unit, block passage of vapors and actually prevent good operation. Compounds for cleaning are usually divided into two (2) main groups:

a. The alkaline cleaners usually contain caustic with water conditioners, synthetic detergents and foam depressants added to enhance cleaning action. The purpose of the alkaline cleaner is to digest the bulk of the soil. The alkaline solutions are usually run first at concentrations ranging from one percent (1%) to three percent (3%) at temperatures of 83°C (180°F) to 88°C (190°F) for thirty (30) to sixty (60) minutes.
b. Acid cleaners are usually food grade with synthetic detergents and inhibitors to prevent attack on metal surfaces. The purpose of acid cleaners is to remove mineral films, alkali cleaner residues, and shine the inside surfaces. Acid solutions are usually used last at concentrations of 0.2 percent (0.2%) to 0.5 percent (0.5%) at 60°C (140°F) to 71°C (160°F).

In all cases cleaners and cleaning instructions should be followed as recommended by the manufacturer of the cleaning compound. It is also necessary to follow the recommendations and instructions of evaporator manufacturers. The evaporators operating with compressed ammonia require special cleaning precautions.

Cleaning Methods: There are three (3) basic methods of cleaning evaporators:

1. Boil-out;
2. Circulation;
3. Spray cleaning; or
4. A combination of the three methods.

a. The boil-out method is the oldest, but it is still very effective. It is accomplished by rolling or boiling the cleaning solution under partial vacuum. Heat is applied by the evaporator and just enough vacuum is used to roll the solution. Cleaning solutions are elevated to the dome and upper parts by opening and closing the vacuum breaker. Hand-brushing of some areas is often necessary following boil-out because it is difficult to thoroughly clean the upper surfaces with this method.
b. Circulation cleaning is a newer method of cleaning. The cleaning solution actually follows the milk or milk product path. The solution is circulated by returning it back to the starting point. Heat is applied by a pre-heater, tube chest, or steam jet, sometimes called a boil-out nozzle. This method is not adaptable to all types of evaporators and it is usually necessary to add spray cleaning devices to thoroughly clean separators and the bottom tube sheet in steam chests.

c. Spray cleaning is the newest method of cleaning evaporators. Cleaning solutions are pumped through spray devices and distributed over the surfaces, which are contacted by the milk or milk product. Heat is applied by a pre-heater, a surge tank, or on the run with live steam. When properly designed and operated spray cleaning systems are used, cleaning problems are at a minimum. Spray cleaning offers many advantages over boil-out or circulation methods of cleaning. Less water and less cleaning solution is required. This not only results in a saving of water, heat and cleaners, but more concentrated cleaning solutions can be used giving faster, more effective cleaning. Heat for the rinse water and cleaning solutions is applied externally, preventing additional burn-on in tube chests. As the evaporator is not under vacuum, less heat is required to keep the solution hot, resulting in a saving of fuel. Higher temperatures can be used to improve cleaning efficiency. There are some disadvantages to spray cleaning. Spray devices cost extra money because they are specifically designed for almost every operation. Spray devices must be properly placed and designed to cover the top of the dome in the separator, the tangential inlets, the vapor lines, sight glasses, and steam chest tubes. Spray cleaning may require additional stainless steel lines to convey the solution at the necessary volumes. Larger pumps are also required to pump the necessary volume of cleaning solution. Even with these disadvantages, the advantages of savings in heat, water, cleaning compound and time outweigh the disadvantages.

d. Sometimes there are advantages in using combined systems of cleaning. It may be possible to boil-out the steam chests and spray the separators. Sometimes it is possible to circulate the steam chests and spray clean the separators or other portions of the unit. Quite often the combined systems, especially the circulation in the spray system, will work best on certain types of evaporators.

e. One of the biggest factors affecting the method of cleaning used is the type of evaporator. In a falling film type evaporator, circulation cleaning can be used to clean the tube chests and spray cleaning can be utilized to clean the evaporator chambers. When using a plate-type evaporator, circulation cleaning is best. In an internal type tube chest, a boil-out system for the tubes and spray cleaning of the separator works very well. With an external chest type evaporator, the entire unit can be spray cleaned. If it is a compressed ammonia operated evaporator, spray cleaning works well. Sanitizing should be done to eliminate any microorganisms, which may have survived the cleaning regimen. Sanitizing can best be accomplished by using chemical sanitizers. Heat may be used if all surfaces are heated to 83°C (180°F) or higher. Since there is a tremendous investment in stainless steel evaporators, it is necessary to use cleaning and sanitizing products, which do not corrode stainless steel. Chemical sanitizers can be applied through the spray equipment or they can be applied with fogging guns.

2. **High-Pressure Pump and High-Pressure Lines:** The high-pressure pump and high-pressure line to the dryer nozzles may be cleaned as a separate circuit by connecting the line to the nozzle back to the drop tank and this tank connecting to the inlet of the high-pressure pump. The regular milk or milk product atomizing nozzles should be removed before cleaning is to be done.

Another method of cleaning the high-pressure pump and lines is to include this pump and high-pressure lines in the circuit when wet cleaning some types of spray dryers. In either case a solution of one to three percent (1-3%) caustic heated to 72°C (160°F) should be circulated for at least thirty (30) minutes. A solution of inhibited acid should be pumped through the atomizing system as a daily procedure to remove the milkstone from the high-pressure pump and high-pressure line. A solution of inhibited acid should be recirculated a minimum of ten (10) to fifteen (15) minutes and followed by a rinse with potable water.

It is also recommended that the high-pressure pump head be disassembled as a daily procedure immediately following the final rinse and the parts be placed on a table or rack for air drying. When the pump is disassembled the parts are to be checked to see if they are clean, and to see if any maintenance is required to remove pits. Seats are also checked at this time. Since a high-pressure pump is subjected daily to extreme heavy duty, the valves and seats are recommended to be ground periodically to maintain uniform pressure on the atomizing nozzles. Prior to use, the entire system should be sanitized.

3. **Wet Cleaning of Dryers:** There are several methods of wet cleaning dryers:

a. The first method is hand-brushing. The cleaning personnel go into the dryer with buckets of cleaning solution and brush all surfaces of the dryer. The unit is then rinsed with a hose.
b. Cleaning can also be done with hand-operated spray guns. These spray guns are pressure pumps, which operate at high pressures in low volumes. In many cases, box-type dryers can be completely cleaned with the addition of a seven (7)-foot extension on these pressure guns. By using high-pressure spray guns and cleaning compounds with a high synthetic detergent content, it is possible to remove very difficult soil.
c. The third method of wet cleaning is by spray cleaning with various types of stationary or rotating spray devices. They usually operate at a high volume of low pressure in the range of 69 kPa (10 psi) to 138 kPa (20 psi). Constant spray coverage can be obtained when spray devices are properly designed. Usually several spray devices are required because of the many chambers, collectors, and down pipes within these units. Less time is required to do a complete job with spray cleaning. The systems are installed so that cleaning lines are easily connected to the spray devices and an effective return system. Spray cleaning time is much shorter than hand cleaning time, especially in large units. Spray cleaning eliminates the entry of cleaning personnel into the drying units. Silo or vertical type dryers are often 6.2 meters (20 ft.) to 30.4 meters (100 ft.) high and it is difficult and dangerous to clean by hand or by hand operated units. Spray cleaning eliminates the flavor contamination when switching to other milk or milk products. If an ungraded milk or milk product is run through the dryer, it is necessary to thoroughly clean before running a Grade "A" milk or milk product. There are disadvantages to spray cleaning. The spray devices must be properly placed and designed to do the complete cleaning job. They must be removable so as not to affect the air currents during operation. However, the advantages of safety plus cleaning time and consistently complete cleaning outweigh the disadvantages. A typical spray cleaning cycle might operate as follows:

(1) The various spray heads are placed in the dryer and securely fastened into place. The rinse water is pumped through the spray device and allowed to run down the side-walls of the drying units. Cleaning compounds which are mild alkaline or chlorinated cleaners are prepared at 0.3 to 1 percent (0.3-1%) concentration, heated to 71°C (160°F) to 83°C (180°F), and circulated for forty-five (45) minutes to one (1) hour. The unit is given a final rinse and is thoroughly dried. Occasionally acid type cleaners are used to control mineral films. Sanitizing with chemical sanitizers is a controversial subject. Sanitizing can be done with heat but it may be difficult to heat all surfaces to 83°C (180°F). Heating to 83°F (180°F) for ten (10) minutes does not kill spore formers. However, they are killed with many chemical sanitizers. Even if heat is used, it is recommended that chemical sanitizers be occasionally used. By pumping the sanitizer solution to the high-pressure pump or by fogging with high pressure, it is possible to completely cover the milk or milk product-contact surface. Actually, the unit must be thoroughly dried before

operation. Chlorine sanitizers may cause corrosion. Obviously, these compounds should be used with care. If chlorine is left on the dryer and heat is applied, the chlorine droplets will become hot and concentrate and cause pitting. When chlorinated cleaners are used, a dryer surface can be effectively cleaned and at least partially sanitized and the solution can be completely rinsed. Acid-synthetic detergent type sanitizers have been developed, which are effective on spore formers. These compounds are germicidal, effective in hard water and stable in hot or cold solutions. They have an advantage in that they are noncorrosive to dairy metal.

(2) It is not necessary to wet clean dryers on a daily basis. However, a schedule should be set up so cleaning is done periodically. As long as a dryer is operating continuously, it is not necessary to clean it from an efficiency standpoint. Some types of dryers require very little cleaning, maybe once each month; others require dry cleaning on a more frequent basis. It is necessary to clean and sanitize dryers if they are going to remain idle any appreciable length of time. Bacteria may grow in dryers, which remain idle. Dryers must be spray cleaned if they are improperly operated, causing burn-on in the drying chamber. Whenever fires develop inside the drying unit or when burn-on occurs, it is necessary to thoroughly clean at least the drying chambers. Quality is the key to the dry milk industry. There should be a program of cleaning and sanitizing of both evaporators and dryers. Better quality milk and milk products are produced in evaporators and dryers when thoroughly cleaned and sanitized on a regular basis.

4. **Dry Cleaning:** It is very difficult to discuss proper cleaning procedures without also discussing proper operating procedures, especially the start-up and shutdown of the dryer. Assuming the dryer has been properly started and operated throughout the run or drying cycle, the first step in a successful cleaning operation is shutting the dryer down properly. The type of energy supplying heat to the dryer chamber, i.e., steam or gas, alters the proper shutdown technique. The correct procedure in shutting down a steam heated dryer is as follows:

a. Shut off the main steam valve at the proper time.
b. Maintain the proper dryer outlet temperature for drying by gradually reducing the output of the high-pressure pump until the residual heat of the steam coil is dissipated to a point where it does not maintain proper temperature or until the milk or milk product being pumped by the high-pressure pump does not maintain a satisfactory spray pattern.
c. Keep the dry milk product removal system and conveying system in operation.
d. Keep the air intake and exhaust fans on the dryer in operation until the main chamber is sufficiently cooled to provide a comfortable atmosphere for the cleaning personnel.

On a gas-fired spray dryer, the burner assembly has very little or no residual heat capacity. Therefore, the shutdown is more rapid. The correct procedure for shutting down a gas-fired dryer is as follows:

a. Shut off the gas supply to the burner.
b. Immediately shut off the high-pressure pump.
c. Same procedure as steam heated dryer.
d. After the above procedures have been accomplished, shut down the intake fan. Let the exhaust fan and vibrators or shakers continue to operate, along with the milk and milk product removal system. The exhaust fan should be severely dampered so that it induces only a small air-flow. A small auxiliary fan is sometimes used in lieu of the dampered exhaust fan. The use of either fan serves a twofold purpose: First, it is helpful to put the drying system

under a slight negative pressure to reduce the tendency for milk or milk product to drift out of the system into the milk plant through open doors, etc. Secondly, it is vital to prevent thermal currents from creating a reverse air-flow through the drying system, which tends to deposit milk or milk product on the heating surfaces and plenum duct. Milk or milk product deposits on steam coils reduce their heating ability, create sediment and conceivably bacterial problem areas. If the dryer is gas fired, there is a further hazard of fire. It is important; therefore, that the closure or covers supplied by the manufacturer be placed on the inlet air duct system simultaneous with the shutdown of the fan. After any prime milk or milk product has been removed from the drying system, the system is ready for cleaning. The cleaning personnel should be supplied each day with a freshly laundered set of coveralls, white cap, white face mask, and clean rubbers or boot covers (canvas or single-service plastic). Prior to donning the above uniform, the procedure is to remove the spray nozzles and pipes as these are normally cleaned with the liquid dryer feed equipment. With clean uniforms, proper brushes and preferably vacuum cleaning equipment, the cleaning personnel enter the main desiccator chamber and start the cleaning process as far upstream as possible from the milk or milk product removal or pneumatic conveyor system:

(1) The first portion cleaned is the collector system. This is done by inserting a brush into the cloth tubes and brushing the length of the tube. Again, this can be done more satisfactorily by utilizing the special vacuum tools designed and available for this service.
(2) Remove the dust covers and brush or vacuum out the nozzle ports.
(3) Manually brush or vacuum the ceiling and walls of the drying chamber.
(4) Sweep or vacuum clean the floor of the dryer, placing milk or milk product in a container.

NOTE: Do not remove this milk or milk product by way of the milk and milk product removal system.

(5) Inspect the dryer for any inadvertent wet spraying or nozzle drippings that may have occurred during the drying cycle. Should either of these have occurred, the application of a minimum amount of water and effort will be required to remove the clinging material. Any moisture introduced must be removed before operation begins because of its effect upon smooth milk or milk product flow and because it would establish a more favorable environment for bacterial growth if it were allowed to remain.
(6) Check the collector for loose or torn bags and any other mechanical checks necessary before leaving the dryer.
(7) Close the dryer securely and check the switches to make sure they are in the proper starting positions. At frequent intervals, not over a two (2) week period, the operator should clean and inspect the heated air intakes of the dryer, assuming that the dryer is properly operated during this time. However, should a malfunction occur where the dryer operator does not follow the procedures outlined for proper shutdown, it may require an inspection and cleaning at closer intervals. Frequent inspection will eliminate a source of sediment contamination.
(8) On start up after dry cleaning of the cloth collector dryer, the first two (2) bags of milk or milk product shall be discarded. This will allow for the removal of any milk or milk product remaining in the tubes and system after shutdown.

AUXILIARY DRY PRODUCT EQUIPMENT

1. **Sifters:** In general, there are two (2) types of dry product sifters in use by the dry milk industry. These are the shaker type and the rotary or gyrating type. Both are designed to operate at various capacities either manually bagging or packaging from their outlet or designed for automatic packaging equipment.
For the general guidance of sifter manufacturers and the dry milk industry, the following screen size openings may be considered as recommended openings to result in satisfactory screening of the listed dry milk product:

Table 13. SIEVE SIZES AND DESIGNATIONS

PRODUCT	SIEVE DESIGNATION FROM ATSM 223.1	MAXIMUM SIEVE OPENING (approx)	
		mm	inch
Nonfat Dry Milk	#25	0.707	0.027
Dry Whole and Dry Buttermilk	#16	1.19	0.047

It is recognized that larger screen size openings may be necessary for sifting certain special dry milk products, such as "instant" products, and for classification of dry milk products into different particle sizes.
Openings referred to above are based on general experience as to what constitutes satisfactory screening to remove dry milk product lumps or potential dry milk product contamination, and also on the ability of most currently used sifters to successfully sift dry milk products through such size openings, without excessive loss of fine dry milk product into the "reject material" outlet. Other factors also affect loss, such as:

a. Percent of "open area" in the screen used;
b. Uneven flow rates to the sifter;
c. Ratio of screening surface to dryer capacity;
d. Amount and kind of mechanical energy applied to the screening surface;
e. Sifter design and construction; and
f. Nature of dry product being sifted.

Screen opening dimensions may be obtained by any desired combination of wire thickness and number of wires per inch. For instance, if the screening surface is made of stainless steel woven wire, the 0.707 mm (0.027 inch) opening might be obtained by using 24 X 24 mesh market grade screen cloth made of wire 0.399 mm (0.014 inch) thick (about 45 percent (45%) open area) or by using 30 X 30 bolting cloth screen made of wire 0.185 mm (0.0065 inch) (about 65 percent (65%) open area) or by many other mesh-wire thickness combinations. These combinations allow a wide choice to obtain a desired balance between screen strength and percent open area. If materials other than stainless steel are used to construct the screening surface, similar combinations may be employed to achieve the desired opening size.

Recommendations for Cleaning Dry Milk Product Sifters:

a. **Dry Cleaning Program:** The procedures set forth below should be followed:
(1) Completely dismantle and thoroughly vacuum or dry brush-clean all dry milk or milk product-contact surfaces of the dry milk sifter. Reassemble as soon as finished and make every effort to keep all parts dry.
(2) Check the sifter screen(s) for broken or displaced wires (threads) and for other openings around the frame of the screen, which might permit the passage of un-sifted dry milk product. Other parts of the sifter, including ball trays and balls, if used, should also be inspected for condition. Any necessary repair or replacement should be made as soon as possible.
(3) Flexible rubber or cloth connectors at the inlet and outlets of the sifter should be thoroughly cleaned daily following the procedures as recommended for the sifter. At this time, connectors should be closely examined for holes, cracks, or other damage.

NOTE: To facilitate removal for cleaning, the use of easily removable, fastening devices are recommended.

(4) Thoroughly vacuum or dry brush-clean all external parts of the sifter, including the sifter frame and drive mechanism.

b. **Wet Cleaning Program:** The procedures set forth below should be followed:
(1) Completely dismantle as cited in a.(1) above; remove all loose dry milk product; then rinse all parts with clear water; and follow by a thorough hand-brushing of all parts, using a general purpose dairy cleaner. Rinse thoroughly to remove all evidence of cleaning solution or soil. It is recommended that hot water at 77°C (170°F) or above be used for rinsing in order to sanitize the equipment and to aid the subsequent drying.
(2) Allow all parts to air dry completely prior to reassembly.
(3) The wet wash should be done as frequently as necessary and should be done after each use, if the sifter is not being used on a daily basis.
(4) After cleaning, drying and reassembly, the dry milk product outlet should be protected from contamination.

c. **General Recommendations:**
(1) Vacuum cleaning is preferred to brush-cleaning or cleaning with air under pressure as it decreases the dust drift problem to other areas of the milk plant.
(2) Brushes or vacuum cleaner fittings, used for cleaning dry milk product-contact surfaces, should not be used for cleaning non-dry milk product-contact surfaces or for other uses, which might result in contamination. Such brushes and special fitting should be stored in an enclosed cabinet when not in use. For protection and housekeeping considerations, such cabinets preferably should be of non-wood construction and should have open mesh metal shelving.

NOTE: For additional details refer to 3-A Sanitary Standards for Sifters for Dry Milk and Dry Milk Products, Serial 26-.

2. **Storage/Shipping Bins:** The use of portable bins, totes, super sacks, or other portable storage/shipping containers shall comply with the construction requirements of Item 11p and the cleaning and sanitizing requirements of Item 12p of this *Ordinance.*

If interior bracing and ladders are used in milk plant storage bins, they shall be constructed of smooth rounded metal, and be installed sufficiently far from the walls to prevent harborages. Dry milk product entrance and discharge openings connected to the attending conveying equipment shall be dust-tight and shall be easily accessible for cleaning. Vents to the exterior shall be equipped with readily removable air filters of adequate capacity or readily removable covers. If air is to be introduced into the dry milk product zone, only filtered air shall be used, and it shall comply with the applicable standards of Appendix H. Auxiliary agitators or any other interior devices, if used, shall be designed to be smooth, crevice-free, and readily cleanable. The exterior surface of the bin should be smooth, hard finished, and readily cleanable. Hinges on covers, if used, shall be the take-apart type. Covers or doors shall be provided to enclose the dry milk product zone when dry milk product is not being dumped. These shall be so constructed that dirt or dust on the top will not slide or fall into the bin when the cover is open. Access openings shall be provided on all in-milk plant bins. Such openings should not be less than 45.7 centimeters (18 inches) in its smallest dimension. Covers shall be constructed without raised internal reinforcements and should be hinged and equipped with a quick opening device. The gaskets for such openings shall be made of solid material that is non-toxic, nonabsorbent, smooth, and unaffected by the dry milk product. Storage/shipping bins in continuous use either in the milk plant or in transporting dry milk products from one (1) milk plant to another should be cleaned according to manufacturer's recommendations when necessary. They may be cleaned by either approved dry cleaning methods or wet cleaned.

3. **Packaging and Packages:** Packaging equipment for dry milk products will vary greatly as to their design depending upon whether the packages being filled are drums, bins or bags. Whatever equipment is used, it should be designed so as to protect the dry milk product from contamination from outside sources and from air during the packaging operation. All connections of conveying equipment to packaging devices should have dust-tight connections. All conveyors, ducts, belts and screws used in connection with packaging equipment should be provided with a dust collector system, capable of eliminating any visible dust. All dry milk product hoppers, when used, should be provided with covers to properly protect the dry milk product from contamination. Hand-filling should not be permitted except for periods of adjustment of automatic weighing devices.

APPENDIX G. CHEMICAL AND BACTERIOLOGICAL TESTS

I. PRIVATE WATER SUPPLIES AND RECIRCULATED WATER - BACTERIOLOGICAL

Reference: Section 7, Items 8r, 19r, 7p and 17p.
Application: To private water supplies, used by dairy farms, milk plants, receiving stations, transfer stations and milk tank truck cleaning facilities, and to recirculated cooling water, used in milk plants, receiving stations and dairy farms.
Frequency: Initially; after repair, modification or disinfection of the private water supplies of dairy farms, milk plants, receiving stations, transfer stations and milk tank truck cleaning facilities, and thereafter; semiannually for all milk plants, receiving stations, transfer stations and milk tank truck cleaning facilities water supplies and at least every three (3) years on dairy farms. Recirculated cooling water in milk plants, receiving stations and on dairy farms shall be tested semiannually.
Criteria: A Most Probable Number (MPN) of coliform organisms of less than 1.1 per 100 mL, when ten (10) replicate tubes containing 10 mL, or when five (5) replicate tubes containing 20 mL are tested using the multiple tube fermentation technique, or less than 1 per 100 mL by the membrane filter technique, or less than 1.1 per 100 mL when using an MMO-MUG technique. (The MMO-MUG technique is not acceptable for recirculated cooling water). 100 ± 2.5 ml water will be used for this analysis. Any sample producing a bacteriological result of Too Numerous To Count (TNTC) - greater than two hundred (200) total bacteriological colonies per 100 mL by the membrane filter technique; or confluent growth by the multiple tube fermentation, MPN technique, without coliform present, shall have a subsequent heterotrophic plate count of less than five hundred (500) colonies per mL in order to be deemed satisfactory. Findings shall be reported as present or less than 1 per 100 mL, absent for coliform organisms.
Apparatus, Method, and Procedure: Tests performed shall conform with the current edition of SMEWW or with FDA approved, EPA promulgated methods for the examination of water and waste water.
Corrective Action: When the laboratory report on the sample is unsatisfactory, the water supply in question shall again be physically inspected and necessary corrections made until subsequent samples are bacteriologically satisfactory.

II. PASTEURIZATION EFFICIENCY - FIELD PHOSPHATASE TEST

Reference: Section 6.
Frequency: When any laboratory phosphatase test is positive, or any doubt arises as to the adequacy of pasteurization due to noncompliance with equipment, or requirements of Item 16p.
Criteria: Less than 350 mU/L by an electronic phosphatase procedure. (Refer to the *SMEDP*)
Apparatus: Fluorophos (Advanced Instruments) and Paslite (Charm Science), approved/validated standards and accessories.
Methods: The test is based on the detection of the phosphatase enzyme, a constituent that is inactivated by pasteurization at 63°C (145°F) for thirty (30) minutes or 72°C (161°F) for fifteen (15) seconds. When pasteurization is faulty, some phosphatase remains and is detected through its action on phosphoricphenyl esters, releasing phenol, which is measured quantitatively by the addition of dibromo-or dichloro-quinonechlorimide to form an indophenol blue color.

Procedure: Refer to the *SMEDP* for details on phosphatase tests.
Corrective Action: Whenever a phosphatase test is positive, the cause shall be determined. Where the cause is improper pasteurization, it shall be corrected and any milk or milk products involved shall not be offered for sale.

III. PHOSPHATASE REACTIVATION IN HTST PASTEURIZED PRODUCTS

The presence of an appreciable quantity of phosphatase in milk and cream after heat treatment has been traditionally regarded as evidence of inadequate pasteurization. However, with the advent of modern HTST methods, evidence has been accumulating that under certain conditions, the relationship between inadequate pasteurization and the presence of phosphatase does not hold.
A number of investigators who have studied HTST pasteurizing methods have concluded that while a negative test can be obtained immediately after pasteurization, the same sample may yield a positive test after a short period of storage, particularly if the product is not continuously or adequately refrigerated. This phenomenon has come to be known as reactivation.
Reactivation may occur in HTST pasteurized products, after storage, at temperatures as low as 10°C (50°F), although 34°C (93°F) is optimum. Products of high fat content generally produce relatively more reactivable phosphatase.
Reactivation is greatest in products pasteurized at about 110°C (230°F) but may occur in products pasteurized at much higher temperatures and as low as 73°C (163°F).
It has been noted that an increase in holding time during pasteurization will reduce reactivation.
The addition of magnesium chloride to HTST processed milk or cream, after pasteurization but before storage, accelerates reactivation. The difference in activity between an adequately pasteurized sample, stored with and without magnesium, and an inadequately pasteurized sample, stored with and without magnesium, forms the basis of a test for differentiating reactivated from residual, inadequately pasteurized, phosphatase.

IV. DETECTION OF PESTICIDES IN MILK

Any Regulatory Agency that has adopted this *Ordinance* should operate under a control program that will insure that milk supplies are free from pesticide contamination, in conformance with Section 2.
Pesticide compounds gain access to milk by various routes. Insecticide contamination may result from any of the following:

1. Application to the lactating animals;
2. Inhalation of toxic vapors, by the animals, following application of insecticides to their environment;
3. Ingestion of residues in feed and water; and
4. Accidental contamination of milk, feed and utensils. Herbicide contamination may result from residues on the lactating animals feed and in their water supply and/or rodenticides may be present in milk as a result of accidental contamination.

At the present time, chlorinated hydrocarbon pesticides are the chief concern. While there are other pest control compounds that are more toxic than the chlorinated hydrocarbons, many of the

agents in this latter group tend to accumulate in the body fat of both lactating animals and human beings, and are secreted in the milk of contaminated lactating animals. The accumulation of these toxic agents in persons continually consuming contaminated milk may reach hazardous concentrations.

Advances in residue analysis have resulted in a radical decrease in the use of paper chromatographic screening procedures for milk, because of its rather limited sensitivity. Regulatory Agencies can now routinely detect residues as low as 0.01 ppm of many of the chlorinated organic pesticides. Satisfactory screening procedures should, therefore, attain this level of sensitivity, which usually necessitates the use of gas chromatography or thin layer chromatography.

General screening procedures of the latter two (2) types are described and discussed in Volume 1 of the *Pesticide Analytical Manual* (PAM) published by FDA.

The need for closer scrutiny of milk supplies for pesticide residues has stimulated considerable research in detection technology. The Regulatory Agency entering upon a surveillance program should carefully check the available equipment in relation to its adaptability to the indicated need.

While a schedule of testing comparable to that for microorganisms, four (4) tests of individual producer's milk during any consecutive six (6) months, would be desirable, broad-spectrum procedures are too time consuming to render such a schedule feasible. As a more practical approach, the following procedure is suggested:

1. Test one (1) load of milk from each milk tank truck route, every six (6) months, by a broad spectrum method and trace positive samples; or
2. Test each producer's milk four (4) times every six (6) months for the most common chlorinated hydrocarbon pesticides, by available instrumental methodology.

NOTE: The above testing disciplines may be applied conveniently to can milk supplies. Where Procedure 1 is used, samples of commingled milk from known sources are drawn from receiving station storage tanks. Sampling for Procedure 2 may be done directly from the weigh tank.

V. DETECTION OF DRUG RESIDUES IN MILK

The problem of drug residues in milk is associated with their use in the treatment of mastitis and other diseases. Failure to withhold milk from the market for a sufficient length of time after treatment may result in the presence of drug residues in milk. Such milk is undesirable for two (2) reasons:

1. It comes from an unhealthy lactating animal; and
2. It is adulterated.

The allergenic properties of certain drugs in common use make their presence in milk potentially hazardous to consumers. Also, substantial losses of byproducts may be sustained by the milk industry each year because of the inhibitory effects of drug residues on the culturing process. Drug residues should be tested for, using tests provided for in Section 6 of this *Ordinance*. These tests are specified in memoranda from the FDA. (Refer to the latest edition of M-a-85, M-a-86, and the 2400 series forms for each specific test method.)

NOTE: *Bacillus stearothermopilus* disk assay analysis performed to fulfill the provisions of Section 7 of this *Ordinance* must be capable of detecting at least four (4) of six (6) Beta lactam drugs at or below FDA reference levels. A zone equal to or greater than 16mm will be considered positive when the *Bacillus stearothermophilus* disk assay is used, provided the 5ppb Beta lactam control zone is 16-20mm. (Refer to the most recent FDA 2400 series form(s) for details related to this analysis.)

VI. ANALYSIS OF MILK AND MILK PRODUCTS FOR VITAMIN A AND D_3 CONTENT

Reference: Section 6.
Frequency: Annually for each product type, or when any doubt arises as to the adequacy of vitamin fortification. (Refer to Appendix O.)
Methods: Vitamin testing shall be performed using test methods acceptable to FDA and other official methodologies that give statistically equivalent results to the FDA methods.

REFERENCES

Official Methods of Analysis of AOAC INTERNATIONAL, 17th Edition, 2000.

Pesticide Analytical Manual, (PAM) available from the U. S. Food and Drug Administration, Center for Food Safety and Applied Nutrition, HFS-335, 5100 Paint Branch Parkway, College Park, MD 20740-3835.

APPENDIX H. PASTEURIZATION EQUIPMENT AND PROCEDURES

I. HTST PASTEURIZATION

OPERATION OF HTST SYSTEMS

HTST pasteurization is important to the dairy industry because of the operating efficiencies that it affords. Properly operated, these units allow a high volume of production in a minimum of processing space.
The ability of HTST pasteurizers to assure a safe, finished milk or milk product hinges on the reliability of the time-temperature-pressure relationships that must prevail whenever the system is in operation. It is important that the milk plant operator understand the HTST process in order to maintain proper surveillance over the equipment. The basic flow pattern is described below:

1. Cold raw milk or milk product, in a constant-level supply tank, is drawn into the regenerator section of the HTST pasteurizer.

NOTE: Some operators prefer to bypass the regenerator when starting. Under this system, cold milk is drawn directly through the timing pump, step 3, and into the heater section. The remaining steps are performed without exception. This bypass arrangement facilitates and speeds up the starting operation. After forward-flow is established at the FDD, the bypass, which may be manually or automatically controlled, is not used and the raw milk or milk product flows through the regenerator. A second start-up technique involves the use of sanitizing solution at 77ºC (170ºF). This is passed through the complete unit and followed immediately by milk or milk product. Dilution of the first milk or milk product does occur; however, care must be taken to prevent this from being packaged.

2. In the regenerator section, the cold raw milk or milk product is warmed by hot pasteurized milk or milk product flowing in a counter current direction on the opposite sides of thin stainless steel surfaces.
3. The raw milk or milk product, still under suction, passes through a positive-displacement-timing pump that delivers it under pressure through the rest of the HTST pasteurization system.
4. The raw milk or milk product is pumped through the heater section, where hot water or steam on opposite sides of thin stainless steel surfaces heats the milk or milk product to a temperature of at 72°C (161°F).
5. The milk or milk product, at pasteurization temperature, and under pressure, flows through the holding tube where it is held for at least fifteen (15) seconds. The maximum velocity of the milk or milk product through the holding tube is governed by the speed of the timing pump, the diameter and length of the holding tube and surface friction.
6. After passing the sensing bulbs of the indicating thermometer and recorder/controller, the milk or milk product passes into the FDD, which automatically assumes a forward-flow position, if the milk or milk product passes the recorder/controller bulb at the preset cut-in temperature, i.e., 72°C (161°F).
7. Improperly heated milk or milk product flows through the diverted-flow line back to the constant-level tank.

8. Properly heated milk or milk product flows through the forward-flow line to the pasteurized milk or milk product regenerator section where it serves to warm the cold raw milk or milk product and, in turn, is cooled.
9. The warm milk or milk product passes through the cooling section, where coolant, on the sides of thin stainless steel surfaces opposite the pasteurized milk or milk product, reduces its temperature to 4.4°C (40°F) and below.
10. The cold pasteurized milk or milk product then passes to a storage tank or vat to await packaging.

HTST PASTEURIZERS EMPLOYING MILK OR MILK PRODUCT-TO-MILK OR MILK PRODUCT REGENERATORS WITH BOTH SIDES CLOSED TO THE ATMOSPHERE

Item 16p(D), of Section 7 establishes standards for regenerators. These standards insure that the raw milk or milk product will always be under less pressure than pasteurized milk or milk product in order to prevent contamination of the pasteurized milk or milk product in the event flaws should develop in the metal or joints separating it from the raw milk or milk product. An explanation of regenerator specifications is given below.

During normal operation, i.e., while the timing pump is operating, raw milk or milk product will be drawn through the regenerator at sub-atmospheric pressure. The pasteurized milk or milk product in the milk or milk product-to-milk or milk product regenerator will be above atmospheric pressure. The required pressure differential will be assured when there is no flow-promoting device downstream from the pasteurized milk or milk product side of the regenerator to draw the pasteurized milk or milk product through the regenerator, and the pasteurized milk or milk product downstream from the regenerator rises to at least 30.5 centimeters (12 inches) elevation above the highest raw milk or milk product level downstream from the constant-level tank, and is open to the atmosphere at this or a higher elevation, as required in Item 16p(D)2.

During a shutdown, i.e., when the timing pump stops, the raw milk or milk product in the regenerator will be retained under suction, except this suction may be gradually relieved by possible entrance of air drawn through the regenerator plate gaskets from the higher outside atmospheric pressure. With a free draining regenerator, as required under Item 16p(D)7, the raw milk or milk product level in the regenerator may drop slowly, depending on the tightness of the gaskets, ultimately falling below the level of the plates to the milk or milk product level in the constant-level tank. However, under these conditions, as long as any raw milk or milk product remains in the regenerator, it will be at sub-atmospheric pressure.

During shutdown, the pasteurized milk or milk product in the regenerator is maintained at atmospheric pressure or above by meeting the elevation requirement of Item 16p(D)2. Pressure greater than atmospheric is maintained when the level of pasteurized milk or milk product is at or above the required elevation and loss of pressure, due to suction, is prevented by prohibiting a downstream pump.

Any backflow of milk or milk product through the FDD would lower the pasteurized milk or milk product level, during pump shutdowns, thus tending to reduce the pressure on the pasteurized milk or milk product side of the regenerator. A FDD cannot be relied upon to prevent backflow in such instances, because during the first few minutes following a pump shutdown, the milk or milk product is still at a sufficiently high temperature to keep the FDD in the forward-flow position. Compliance with the provisions of Item 16p(D)2 and 3; however, will insure a proper pressure differential in the regenerator.

At the beginning of a run, from the time raw milk or milk product or water is drawn through the regenerator, until the pasteurized milk or milk product or water has risen to the elevation specified in Item 16p(D)2, the pasteurized milk or milk product side of the regenerator is at atmospheric pressure or higher. Even if the timing pump should stop during this period, the pressure on the pasteurized milk or milk product side of the regenerator will be greater than the sub-atmospheric pressure on the raw milk or milk product side. This will be assured by compliance with Item 16p(D)2 and 3, as long as any raw milk or milk product remains in the regenerator.

When a raw milk or milk product booster pump is incorporated into the HTST system, Item 16p(D)5 requires, in part, that automatic means shall be provided to assure, at all times, the required pressure differential between raw and pasteurized milk or milk product in the regenerator, before the booster pump can operate.

THE USE OF SEPARATORS WITHIN HTST SYSTEMS

Separators in HTST pasteurization systems must be installed and operated in such a manner that they will not adversely effect the regenerator pressures, create a negative pressure on the FDD during operation or cause milk or milk product flow through the holding tube during times when such flow would compromise a required public health safe guard.

1. A separator may be located between the outlet of a raw regenerator and the timing pump or between raw regenerator sections if the separator is automatically valved out of the system, and separator stuffing pump(s) are de-energized, when:
   a. The timing pump is not in operation; or
   b. A dual stem FDD is in the inspect position; or
   c. In a system with a dual stem FDD, in which the separator is located between sections of a raw regenerator, during the first ten (10) minutes of a required ten (10) minute time delay in CIP mode and during any period of diverted-flow; or
   d. The pressures in any raw regenerator sections, located after the separator, are out of compliance with the pressure requirements of this *Ordinance*.

NOTE: The second section of a split raw regenerator must automatically drain freely to the constant-level tank or to the floor in the event of a shut down.

2. A separator may not be located between the timing pump and the FDD.
3. A separator may be located on the pasteurized side of the FDD if:
   a. A properly installed atmospheric break is located between the FDD and the inlet of the separator;
   b. All milk or milk product rises to at least 30.5 centimeters (12 inches) higher than the highest raw milk or milk product in the system and is open to the atmosphere at some point between the outlet of the separator and the inlet of any pasteurized side regenerator;
   c. All milk or milk product rises to at least 30.5 centimeters (12 inches) higher than the highest raw milk or milk product in the system and is open to the atmosphere at some point between the outlet of any pasteurized side regenerator and the inlet of a separator; and

d. The separator is automatically valved out of the system, and the separator stuffing pump is de-energized:

(1) When a dual stem FDD is in the first ten (10) minutes of a required ten (10) minute delay in CIP mode;
(2) When the FDD is diverted in product or inspect mode;
(3) When the timing pump is not in operation; and
(4) When the temperature is below the required pasteurization temperature and the FDD is not in the fully diverted-position.

4. The following criteria applies to installations where a separator must be valved out:
   a. A valve must be located to isolate the product supply line from the separator;
   b. A valve must be located to prevent all flow exiting the separator from being returned to the pasteurization system downstream of the separator; and
   c. The valves are required to move in order to accomplish the two (2) criteria listed above and must move to the valved-out position, and any separator stuffing pumps must be de-energized, upon loss of air or power.

THE USE OF LIQUID INGREDIENT INJECTION WITHIN HTST SYSTEMS

Milk or milk product flavoring slurries, condensed milk or milk products, and cream or skim for standardization and similar ingredients may be injected at a point after the last regenerator and before the timing pump, if all of the following conditions are met:

1. The slurry injection valve(s) is (are) closed and the slurry pump is de-energized:
   a. When the FDD is in inspect mode;
   b. When the timing pump is not in operation; and
   c. When the temperature is below the required pasteurization temperature and the FDD is not in the fully diverted position.
2. The slurry injection valve(s) is (are) of the fail-safe type, spring-to-close and air-to-open, and are “block-and-bleed” design with a full port open to the atmosphere between the HTST isolation seat and the slurry pump when slurry is not being injected.
3. The slurry piping between the slurry pump and the injection point may rise to a height that is higher than the overflow level of the slurry supply tank(s) but is at least 30.5 centimeters (12 inches) lower than the required opening to the atmosphere on the pasteurized side.
4. The slurry supply tank has an overflow that is at least twice the diameter of the largest inlet pipe, or all inlet pipes are disconnected and the openings capped during operation of the slurry pump.
5. There is a check-valve in the flow stream of the milk or milk product line from the last regenerator, typically after the separator, upstream of the injection point valve.
6. If the slurry contains milk and/or milk products, tanks used to blend and hold such slurry shall be completely emptied and cleaned after each four (4) hours of operation or less, unless it shall be stored at a temperature of 7ºC (45ºF) or less, or at a temperature of 66ºC (150ºF) or more and be maintained thereat until the time of injection.
7. If computers or programmable controllers are used to provide any of these required functions, they shall meet the applicable portion of Appendix H., V.
8. Appropriate test procedures shall be provided to evaluate the required inter-wiring and function.

NOTE: 1. This Section describes one (1) method that has been reviewed and accepted for this purpose. It does not preclude other methods that may be reviewed and found acceptable.
2. In order to help assure compliance with Section 2-Adulteration of this *Ordinance*, a Regulatory Agency may require that the milk plant close the slurry valve and de-energize the slurry pump during times when the system is recycling milk or milk product, such as in recycle mode, diverted-flow, or the first ten (10) minutes of the CIP cycle. If a computer is used to accomplish this, it does not need to meet Appendix H., V.-Criteria for the Evaluation of Computerized Systems for Grade "A" Public Health Controls of this *Ordinance*.

PRESSURE RELIEF VALVES, LOCATED WITHIN HTST, HHST AND ASEPTIC PROCESSING SYSTEMS

1. **Between the Timing Pump and the Beginning of the Holding Tube:** Placement of a pressure relief valve between the timing pump and the beginning of the holding tube is acceptable provided:

a. The pressure relief valve is a fail-safe/spring-to-close valve with a spring pressure greater than the highest normal operating pressure of the system when operating in "Product" mode; or a fail-safe/spring-to-close valve with air assist and/or overriding air pressure.

b. Provisions are made for the cleaning of the valve vent and any return piping to the constant-level tank whenever the system is cleaned.

c. The pressure relief valve vent opening is such that any leakage is readily visible. This may be accomplished by opening the valve vent directly to the floor or by providing sanitary piping from the valve vent to the constant-level tank. If the later option is utilized, the piping shall be properly sloped to assure drainage to the constant-level tank and provide a means of leak detection, such as by a properly located and installed sight-glass.

d. The pasteurizer shall not be timed if the valve is leaking.

e. If the valve is leaking during operation, the system is considered in violation of Item 16p(D) of this *Ordinance*, unless it is designed and operated so that loss of pressure from the pasteurized side of the regenerator cannot occur if the system flow-promoting devices stop while the FDD is in the forward-flow position.

For Example: In a magnetic flow meter based timing system there is a fail-safe, spring-to-close valve or check-valve that must also be located between the timing pump and the holding tube. This item is satisfied if the pressure relief valve is located prior to this fail-safe valve or check-valve.

2. **Downstream from the Holding Tube in HTST Systems:** The pressures in the pasteurized side of the regenerator must be protected from falling within 6.9 kPa (1 psi) of the pressures in the raw side of the regenerator at all times, including during shut down. A relief valve and line on the pasteurized side of the FDD can meet this criterion if:

a. After the relief valve and before the entrance to the pasteurized side of a regenerator, all milk or milk product rises at least 30.5 centimeters (12 inches) higher than the highest raw milk or milk product in the system, and is open to the atmosphere at that point; or

b. After exiting the pasteurized regenerator, and before the pressure relief valve, all milk or milk product must rise at least 30.5 centimeters (12 inches) higher than the highest raw milk or milk product in the system, and be open to the atmosphere at that point; or

c. The pressure relief valve is spring-loaded and plumbed so that it cannot be opened or forced open in any mode, "Product", "CIP" or "Inspect", without the assistance of pressure from the liquid flowing through the system. In this case, a leaking pressure relief valve can cause an unacceptable loss of pressure in the pasteurized side of the regenerator during a shut down and is considered a violation of Item 16p(D) of this *Ordinance*.

MAGNETIC FLOW METER BASED TIMING SYSTEMS FOR HTST PASTEURIZERS

Many HTST pasteurizing system use magnetic flow meter based timing systems. The flow through these systems is developed by a combination of flow promoting devices including booster and stuffer pumps, separators and clarifiers, homogenizers and positive displacement pumps.

Item 16p(B)2(f) of Section 7 provides for their use, provided they meet the following specifications for design, installation and use.

COMPONENTS: Magnetic flow meter based timing systems shall consist of the following components:

1. A sanitary magnetic flow meter which has been reviewed by FDA or one (1) which is equally accurate, reliable and will produce six (6) consecutive measurements of holding time within 0.5 seconds of each other.
2. Suitable converters for conversion of electric and/or air signals to the proper mode for the operation of the system.
3. A suitable flow recorder capable of recording flow at the flow alarm set point and also at least 19 liters (5 gallons) per minute higher than the flow alarm setting. The flow recorder shall have an event pen that shall indicate the status of the flow alarm with respect to flow rate.
4. A flow alarm, with an adjustable set point, shall be installed within the system which will automatically cause the FDD to be moved to the divert position whenever excessive flow rate causes the milk or milk product holding time to be less than the legal holding time for the pasteurization process being used. The flow alarm shall be tested by the Regulatory Agency in accordance with the procedures of Appendix I, Test 11, 2.A and B at the frequency specified. The flow alarm adjustment shall be sealed.
5. A loss-of-signal alarm shall be installed with the system, which will automatically cause the FDD to be moved to the divert position whenever there is a loss-of-signal from the meter. The loss-of-signal provision shall be tested by the Regulatory Agency in accordance with Appendix I, Test 11, 2.C at the frequency specified. The loss-of-signal provision shall be sealed.
6. When the legal flow rate has been reestablished, following an excessive flow rate, a time delay must be instituted, which will prevent the FDD from assuming the forward-flow position until at least a fifteen (15) seconds, for milk or milk product, or twenty-five (25) seconds for eggnog and similar products, of continuous legal flow has been re-established. The time delay must be tested by the Regulatory Agency and if it is of the adjustable type shall be sealed.
7. A sanitary check valve or normally closed automatically controlled sanitary valve shall be installed with the magnetic flow meter to prevent a positive pressure in the raw milk or milk product side of the regenerator whenever a power failure, shutdown or flow-diversion occurs.

8. When a regenerator is used with large systems, it will be necessary to bypass the regenerator during start-up and when the FDD is in the diverted-flow position. Care should be taken in the design of such bypass systems to assure that a dead-end does not exist. A dead-end could allow milk or milk product to remain at ambient temperature for long periods of time and allow bacterial growth in the milk or milk product. Caution should also be observed with such bypass systems and any valves used in them so that raw milk or milk product will not be trapped, under pressure in the raw regenerator plates, and not have free drainage back to the constant-level tank when shutdown occurs.
9. Most systems will utilize a dual stem FDD and will be using the timing pump during the mechanical cleaning cycle. All public health controls, required of such systems, must be applicable. When switching to the "CIP" position, the FDD must move to the divert position and must remain in the diverted-flow position for at least ten (10) minutes, regardless of temperature, and the booster pump cannot run during this ten (10) minute time delay.
10. All systems shall be designed, installed and operated so that all applicable tests required by Section 7, Item 16p(E) can be performed by the Regulatory Agency, at the frequency specified. (Refer to Appendix I.) Where adjustment or changes can be made to these devices or controls, appropriate seals shall be applied by the Regulatory Agency after testing, so that changes cannot be made without detection.
11. Except for those requirements directly related to the physical presence of the timing pump, all other requirements of the most recent edition of this *Ordinance* are applicable.

PLACEMENT OF COMPONENTS: Individual components in the magnetic flow meter based timing systems shall comply with the following placement conditions:

1. The timing pump shall be located downstream from the raw milk or milk product regenerator section, if a regenerator is used.
2. The magnetic flow meter shall be placed before the holding tube and after any bypassed regenerator(s). There shall be no intervening flow-promoting components between the meter and the holding tube.
3. The control valve, used with the constant speed flow promoting device, may be located downstream of the magnetic flow meter.
4. The magnetic flow meter, the sanitary check valve or normally closed control valve, shall all be located upstream from the start of the holding tube.
5. All flow-promoting devices, which are upstream of the FDD, such as booster and stuffer pumps, separators and clarifiers, homogenizers and positive displacement pumps shall be properly interwired with the FDD so that they may run and produce flow through the system at sub-legal temperatures, only when the FDD is in the fully diverted position and when in "Product" run mode. Separators or clarifiers that continue to run, after they are de-energized must be automatically valved-out of the system, with fail-safe valves, so they are incapable of producing flow.
6. There shall be no product entering or leaving the system, i.e., cream or skim milk from a separator or other product components, between the magnetic flow meter and the FDD.
7. The magnetic flow meter shall be so installed that the milk or milk product has contact with both electrodes at all times when there is flow through the system. This is most easily accomplished by mounting the flow tube of the magnetic flow meter in a vertical position with the direction of flow from the bottom to the top. However, horizontal mounting is acceptable

when other precautions are taken to assure that both electrodes are in contact with the product. They should not be mounted on a high horizontal line that may be only partially full and thereby trap air.

8. The magnetic flow meter shall be piped in such a manner that at least ten (10) pipe diameters of straight pipe exists, upstream and downstream from the center of the meter, before any elbow or change of direction takes place.

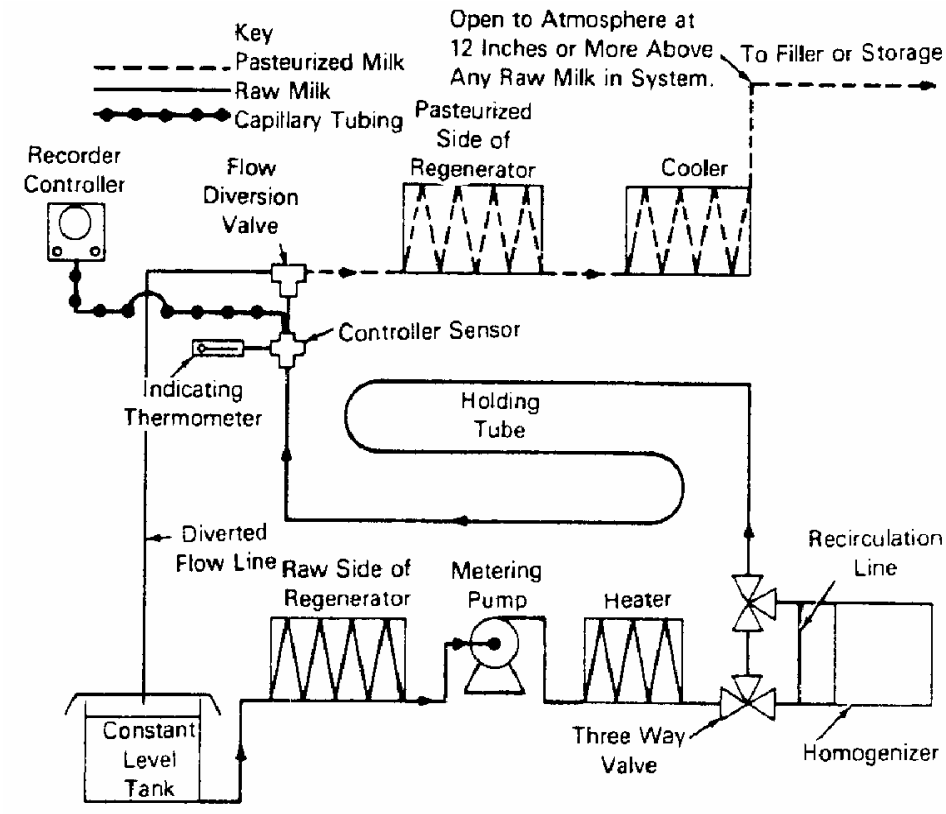

Figure 26. Milk-to-Milk Regeneration - Homogenizer Upstream from Holding Tube

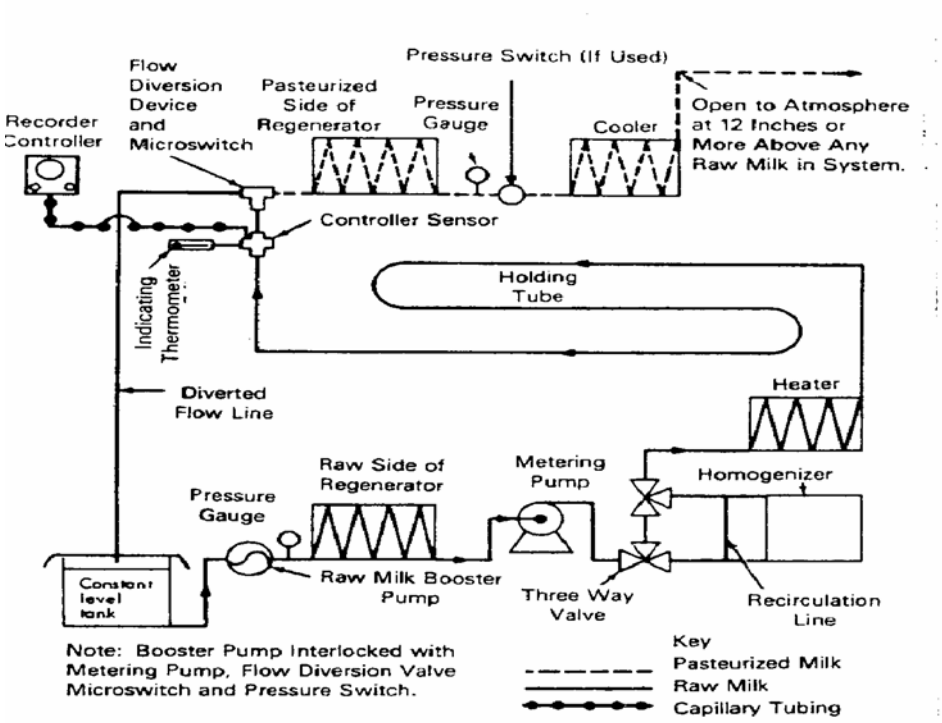

Figure 27. Milk-to-Milk Regeneration - Booster Pump

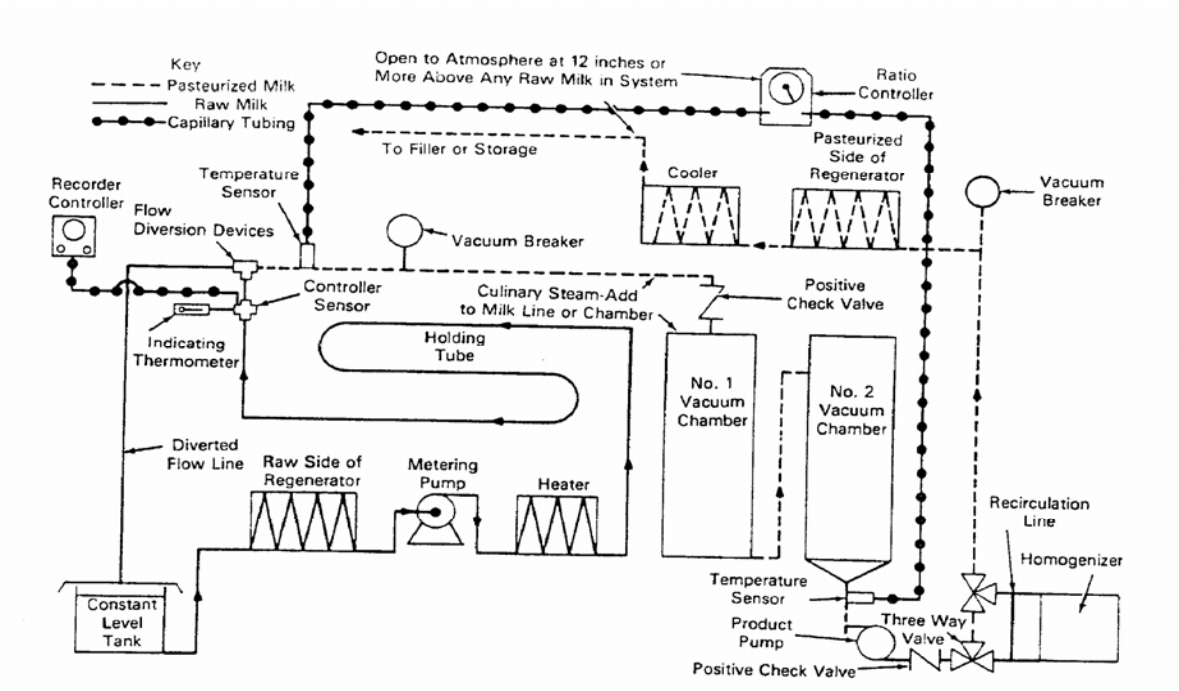

Figure 28. Milk-to-Milk Regeneration - Homogenizer and Vacuum Chambers Downstream from Flow-Diversion Device

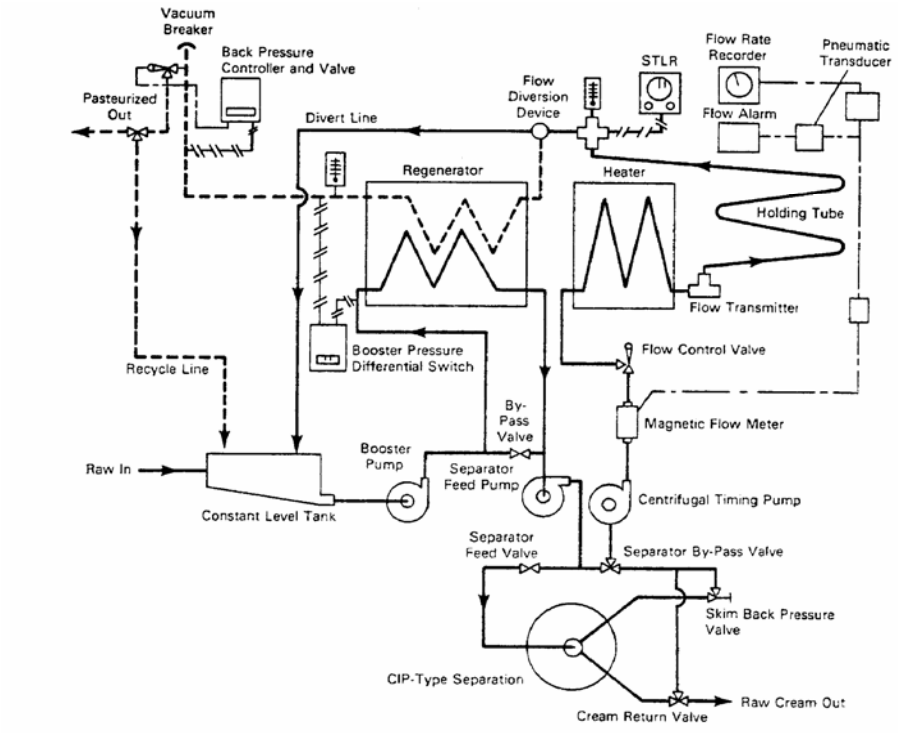

Figure 29. HTST System with a Magnetic Flow Meter Using a Constant Speed Centrifugal Pump and a Control Valve

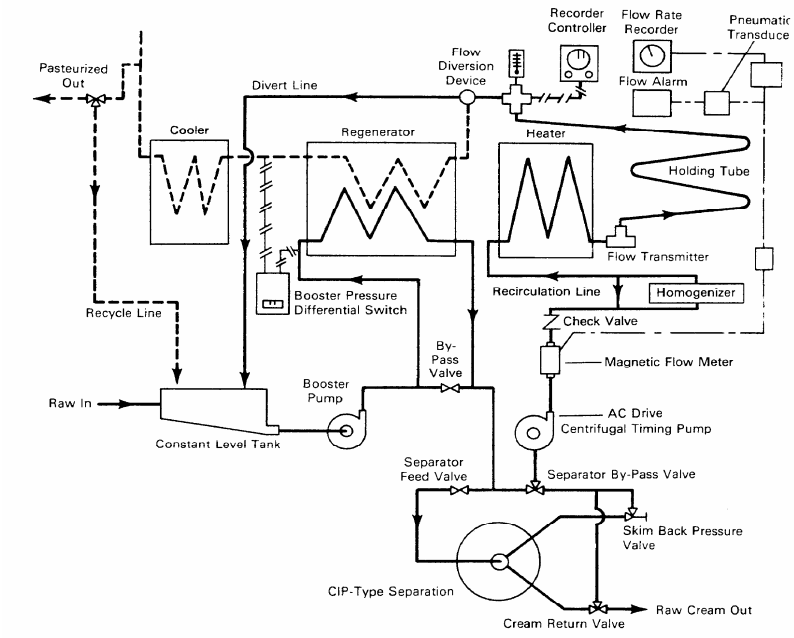

Figure 30. HTST System with a Magnetic Flow Meter Using an A-C Variable Speed Centrifugal Pump

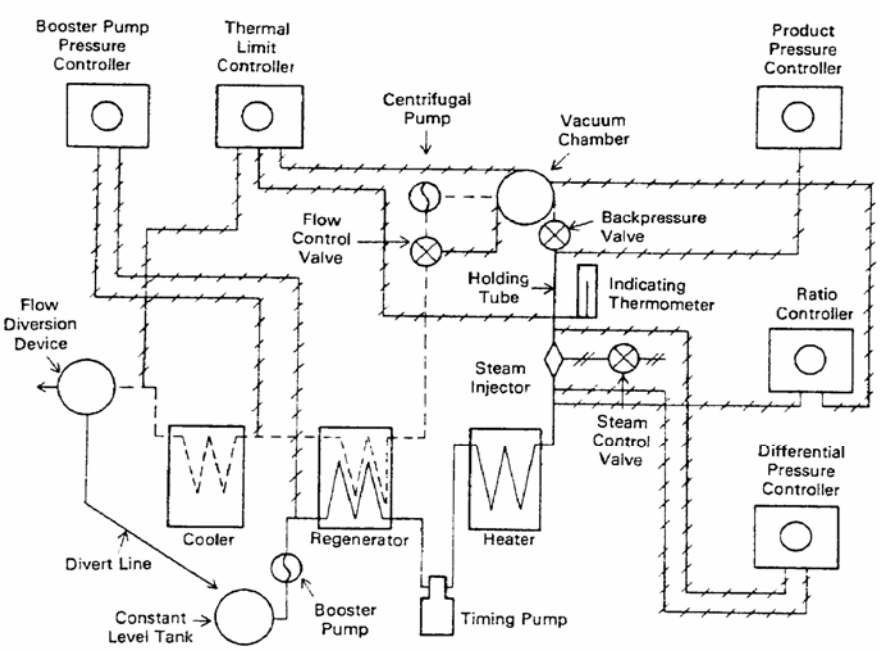

Figure 31. Controls for Steam Injection Pasteurizer

II. AIR FOR DRYING EQUIPMENT AND AIR UNDER PRESSURE - DIRECT CONTACT WITH MILK AND MILK PRODUCTS AND MILK PRODUCT-CONTACT SURFACES

AIR FOR DRYING EQUIPMENT

Filter Media: Intake air filter media shall consist of fiberglass with a downstream backing dense enough to prevent fiberglass break off from passing through, cotton flannel, wool flannel, spun metal, activated carbon, activated alumina, non-woven fabric, absorbent cotton fiber, electrostatic, or other suitable materials which, under conditions of intended use, are non-toxic and non-shedding and which do not release toxic volatiles or other contaminants to the air, or volatiles which impart any flavor or odor to the milk or milk product. Chemical bonding materials contained in the media shall be non-toxic, non-volatile and insoluble under all conditions of use. Disposable media are not intended to be cleaned and re-used. Electronic air cleaners using electrostatic precipitation principles to collect particulate matter may be used in spray drying systems only as a pre-filter.

Filter Performance: The air supply system and/or ducting shall be such that the air supply is caused to pass through suitable air filters, properly installed, before coming in contact with milk product-contact surfaces of the drying system. Supply air filters for air, which will be heated before it comes in contact with the milk or milk product, shall be of a design, selected to operate at a face velocity, and installed in a manner which will allow the filter manufacturer's rating to be 90 percent (90%) or higher, when tested in accordance with the American Society of Heating, Refrigerating and Air-Conditioning Engineers (ASHRAE) Synthetic Dust Arrestance test.[1]
Supply air filters for air, which will not be heated before it comes in contact with the milk or milk product, shall be of a design, selected to operate at a face velocity, and installed in a manner which will allow the filter manufacturer's rating to be 85 percent (85%) or higher when tested in accordance with the ASHRAE Atmospheric Dust Spot Method.[1]

AIR UNDER PRESSURE – MILK PRODUCT-CONTACT SURFACES

Filter Media: Air intake and pipeline filters shall consist of fiberglass with a downstream backing dense enough to prevent fiberglass break off from passing through, cotton flannel, wool flannel, spun metal, electrostatic material or other equally acceptable filtering media, which are

---

[1] The method of making these tests will be found in the following reference: *Method of Testing Air Cleaning Devices, ASHRAE Standard* 52. Available from The American Society of Heating, Refrigerating and Air-Conditioning Engineers.
[2] Dill, R.S., A Test Method for Air Filters. Transactions of the American Society of Heating and Ventilation Engineers. 44:379, 1938. Society of Automotive Engineers, 400 Commonwealth Drive, Warrendale, PA 15096-0001 (412) 776-4841.
[3] DOP-Smoke Penetration and Air Resistance of Filters. Military Standard No. 282. Section 102.91. Naval Supply Depot. 5801 Tabor Avenue, Philadelphia, Pennsylvania 19120.
[4] MIL-STD-282-Military Standard 282: Method 102.9.1: Dicoctyphthalate Fog Method (DOP). Standardization, Document Order Desk (Department of Navy), 700 Robinson Avenue, Building 4, Section D, Philadelphia, PA 1911-5094.

non-shedding and which do not release to the air, toxic volatiles or volatiles which may impart any flavor or odor to the milk or milk product.

Filter Performance: Intake air filter efficiency shall be at least 98% SAE J726[2], June 1987[3] using Air Cleaner (AC) coarse test dust. Final filter efficiency shall be at least 99% as measured by the Dioctylphthalate Fog Method (DOP) test (with a mean particle diameter of 0.3 microns).[4] When commercially sterile air is required, the final filter efficiency shall be at least 99.99% as measured by the DOP test.

FABRICATION AND INSTALLATION

Air Supply Equipment: The compressing equipment shall be designed to preclude contamination of the air with lubricant vapors and fumes. Oil-free air may be produced by one (1) of the following methods or their equivalent:

a. Use of a carbon ring piston compressor;
b. Use of oil-lubricated compressor with effective provision for removal of any oil vapor by cooling the compressed air; or
c. Water-lubricated or non-lubricated blowers.

The air supply shall be taken from a clean space or from relatively clean outer air and shall pass through a filter upstream from the compressing equipment. This filter shall be located and constructed so that it is easily accessible for examination and the filter media are easily removable for cleaning or replacing. The filter shall be protected from weather, drainage, water, product spillage and physical damage.

Moisture Removal Equipment: Air under pressure systems in excess of one (1) bar, i.e., 103.5 kPa (15psi), shall be provided with methods of moisture removal. The removal of moisture may be achieved by condensation and coalescing filtration or absorption, or equivalent, to prevent free water in the system. If it is necessary to cool the compressed air, an after-cooler shall be installed between the compressor and the air storage tank for the purpose of removing moisture from the compressed air.

Filters and Moisture Traps: Filters shall be constructed so as to assure effective passage of air through the filter media only. The coalescing filter and associated traps shall be located in the air pipeline downstream from the compressing equipment, and from the air tank, if one is used. The filter shall be readily accessible for examination, cleaning, and for replacing the filter media. The moisture trap shall be equipped with a petcock or other means for draining accumulated water. (Refer to Figures 32, 33 and 36)

When coalescing filters are used, a means shall be provided to measure the differential pressure across the filter. The differential pressure device is required to indicate the need for filter media replacement.

All coalescing filter housings shall be provided with a means of removing the condensed liquid from the filtration device. This can be accomplished by an automatic or manual drain installed on the base of the filter housing.

The final filter media shall be disposable. The filter media shall be located in the air line upstream from, and as close as possible to, the point of application (Refer to Figures 32, 33 and 36) except that a final filter shall not be required where the compressing equipment is of a fan or

blower type and operating at a pressure of less than one (1) bar, i.e., 103.5 kPa (15psi). (Refer to Figures 34 and 35)
Electronic air cleaners utilizing electrostatic precipitation principles to collect particulate matter may be used.
Disposable filter media shall not be cleaned and reused.

Air Piping: The air piping from the compressing equipment to the filter and moisture trap shall be readily drainable.
A milk or milk product check-valve of sanitary design shall be installed in the air piping, downstream from the disposable media filter, to prevent backflow of milk or milk product into the air pipeline, except that a check-valve shall not be required if the air piping enters the milk or milk product zone from a point higher than the milk or milk product overflow level, which is open to the atmosphere, or is for dry product applications, or for other dry application where liquids are not present.
When a check-valve is not required, plastic or rubber or rubber-like tubing and suitable compatible fittings and connections made of plastic or stainless steel may be used between the final filter and the point of application.
Air distribution piping and fittings after the final filter shall be of corrosion-resistant materials.
Air distribution piping, fittings and gaskets between the discharge of the sanitary check-valve to the processing equipment shall be sanitary piping that conforms to the requirements of Item 10p of Section 7 of this *Ordinance*, except that:

a. When air under pressure is directed at product-contact surfaces of containers, closures and supplementary fitments, the air passage from the final filter to the point of application shall be made of a non-toxic, relatively nonabsorbent material. In this application, check-valves are not required. The final filter shall be located as close as practical to the point of application. (Refer to Figure 36)

When used for air agitation, tubing used to introduce air into the product and/or product zone shall be sanitary piping that conforms to the requirements of Item 10p of Section 7 of this *Ordinance*. There shall be no threads on product-contact surfaces. When drilled or perforated pipe is used, internal drilling burrs shall be removed and the orifices shall be chamfered on the outer surface of the pipe. If the volume of the air from the compressing equipment is in excess of that required for satisfactory agitation, suitable means shall be employed to eliminate the excess volume.

NOTE: For additional details, refer to the *3-A Accepted Practices for Supplying Air Under Pressure in Contact with Milk, Milk Products and Product-Contact* Surfaces 604- and 3-A Accepted Practices for Spray Drying Systems 607-.

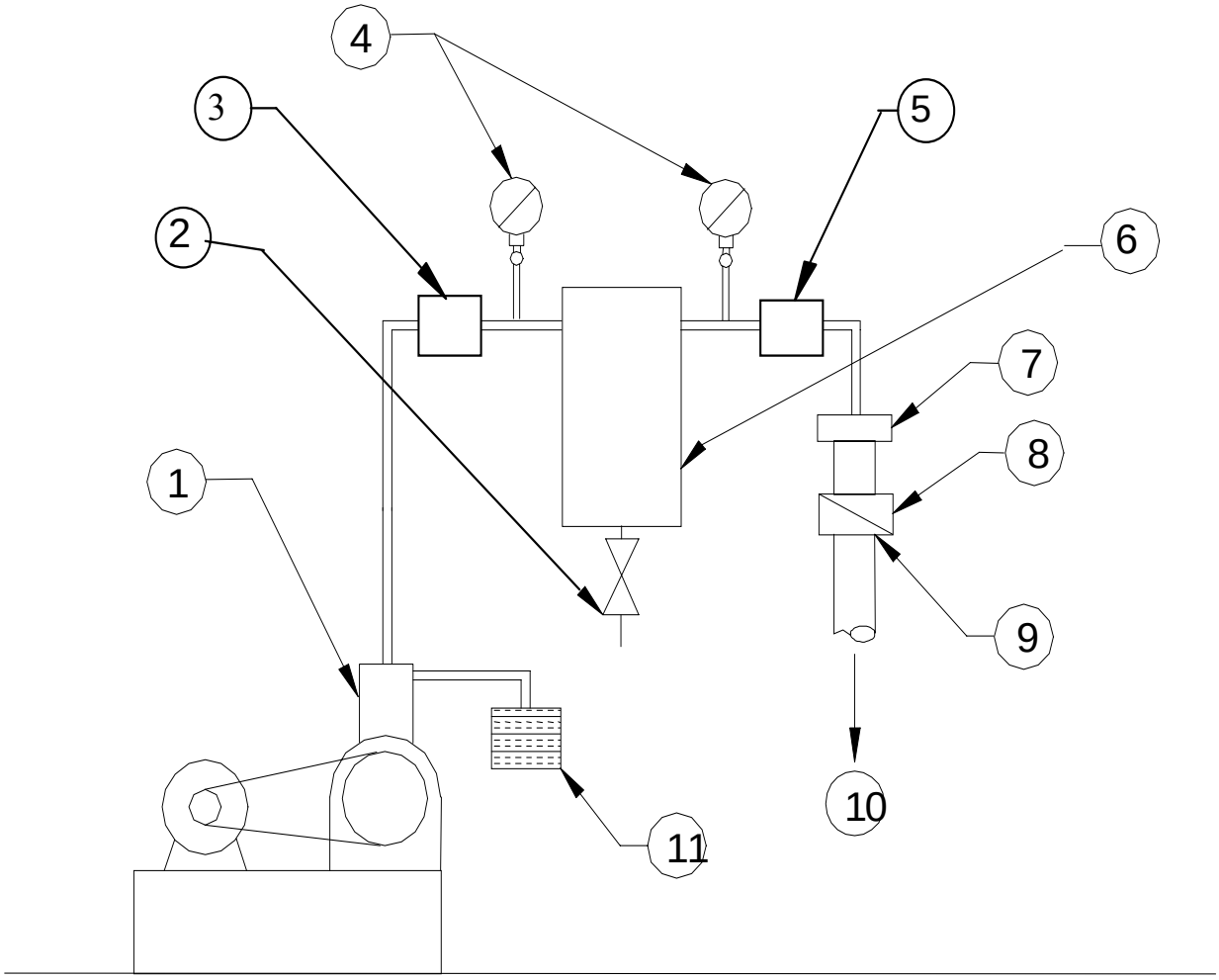

Figure 32. Individual Compression-Type Air Supply

1. Compressing Equipment
2. Drain Valve
3. After-cooler (When Used)
4. Pressure Gauge (Optional)
5. Dryer (When Used)
6. Air Pipe Line Coalescing Filter and Moisture Trap
7. Final Filter
8. Product Contact Valve (Where Required)
9. Sanitary Piping Downstream From This Point
10. To Point of Application
11. Intake Air Filter

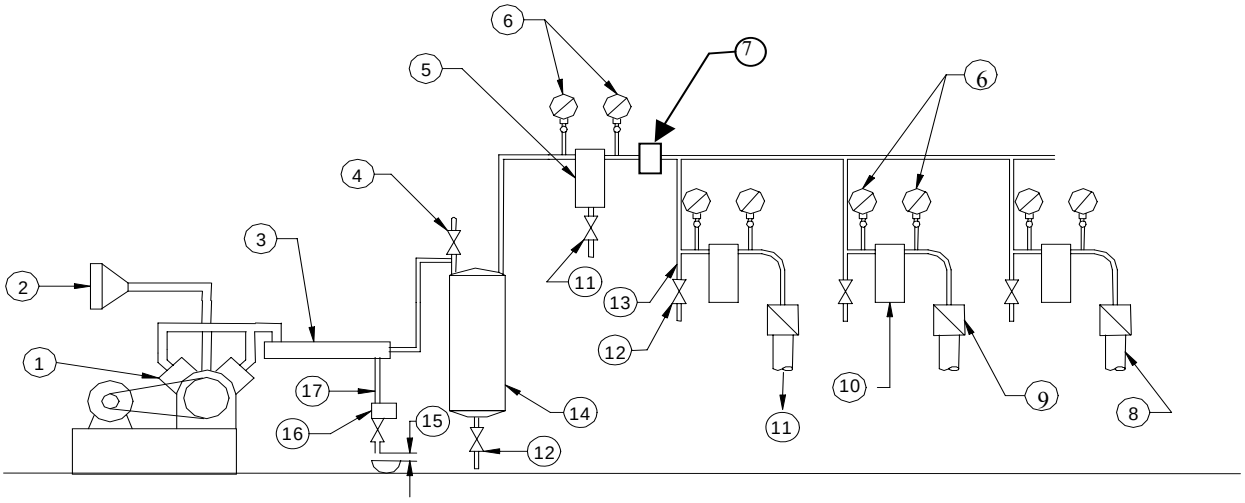

Figure 33: Central Compression-Type Air Supply

1. Compressing Equipment
2. Intake Air Filter
3. After-cooler
4. Sanitary Relief Valve
5. Air Pipe Line Coalescing Filter and Moisture Trap
6. Pressure Gauge (Optional)
7. Dryer (When Used)
8. Sanitary Piping Downstream From This Point
9. Product Check Valve (Where Required)
10. Final Filter
11. To Point of Application
12. Drain Valve
13. Moisture Leg or Trap
14. Air Storage Tank
15. Air Gap
16. Trap and Drain Valve
17. Condensate Pipe

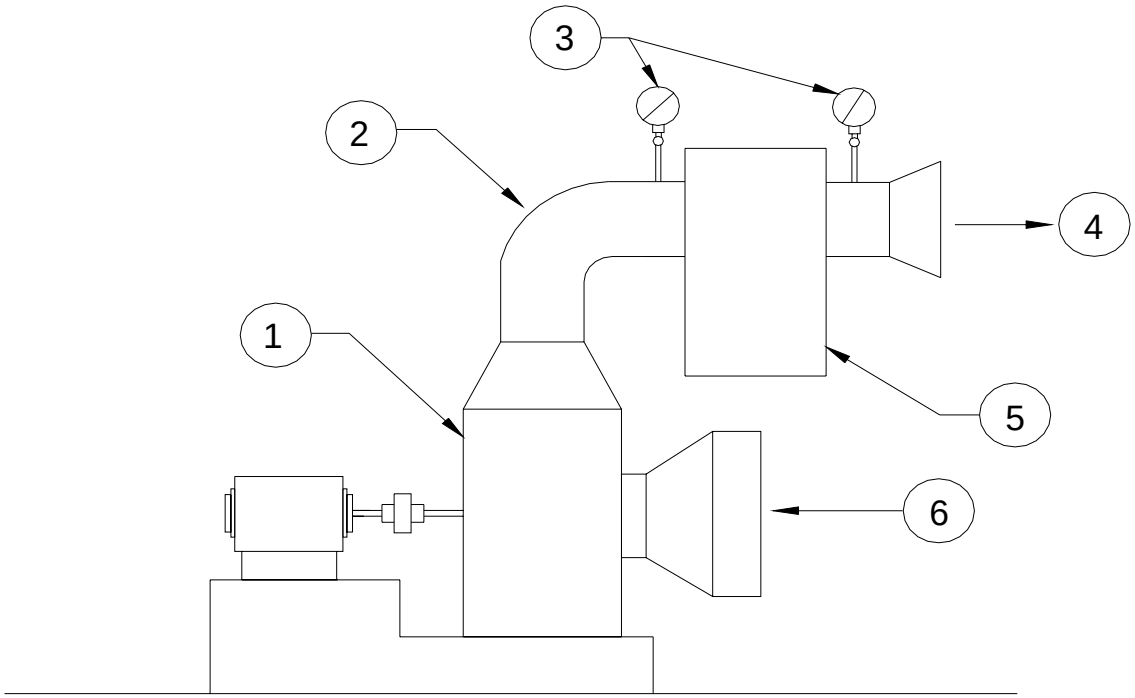

Figure 34: Individual Blower-Type Air Supply

1. Blower or Fan, 34.5-103.5 kPa (5-15 psi)
2. Air Line or Duct
3. Pressure Gauge (When Used)
4. To Point of Application
5. Final Filter (When Used)
6. Intake Air Filter

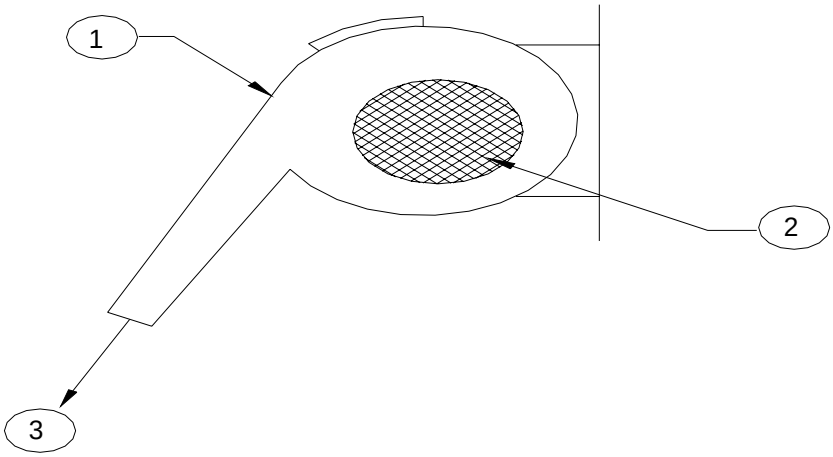

Figure 35: Individual Fan-Type Air Supply

1. Blower or Fan, Below 34.5 kPa (5 psi)
2. Intake Air Filter
3. To Point of Application

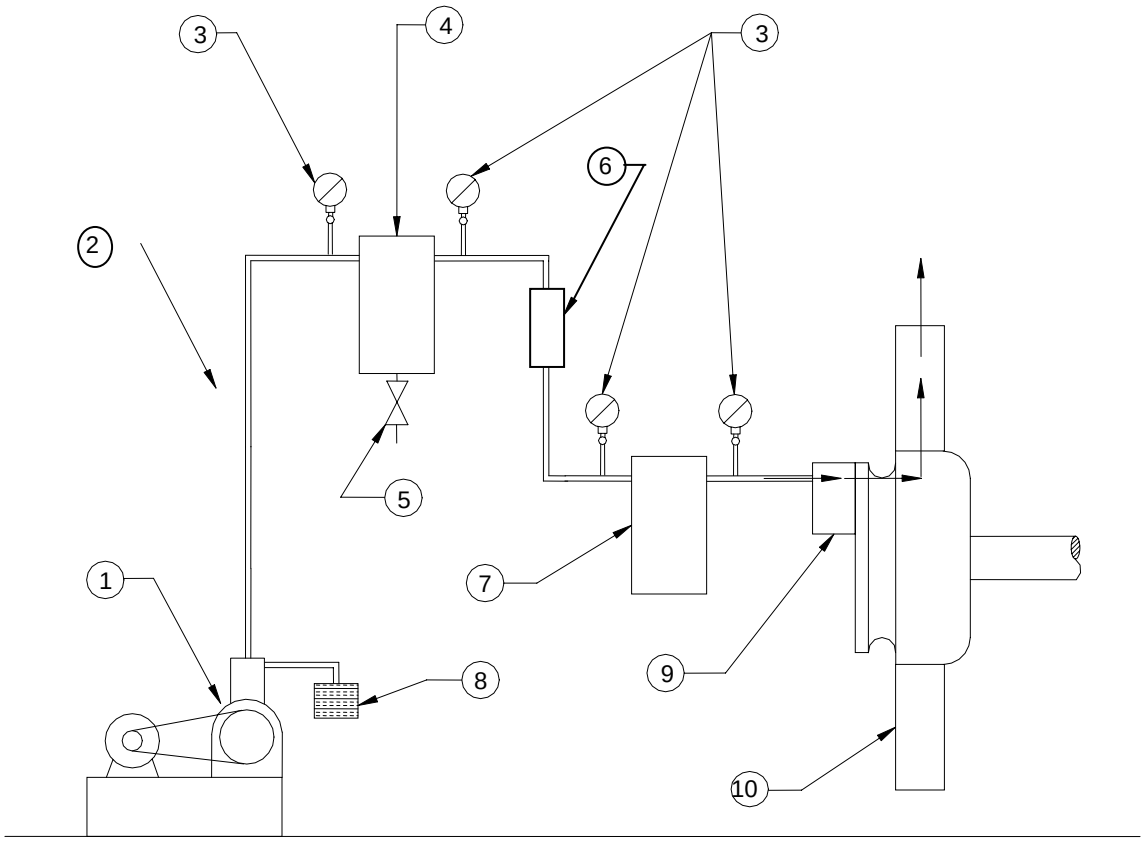

Figure 36: Rotating Mandrel Assembly

1. Compressing Equipment
2. After-cooler (When Used)
3. Pressure Gauge (When Used)
4. Air Pipeline Coalescing Filter and Moisture Trap
5. Drain Valve
6. Dryer (When Used)
7. Final Filter
8. Intake Air Filter
9. Fixed Air Passage
10. Rotating Mandrel Assembly

III. CULINARY STEAM – MILK AND MILK PRODUCTS

The following methods and procedures will provide steam of culinary quality for use in the processing of milk and milk products.

SOURCE OF BOILER FEED WATER

Potable water or water supplies, acceptable to the Regulatory Agency, will be used.

FEED WATER TREATMENT

Feed water may be treated, if necessary, for proper boiler care and operation. Boiler feed water treatment and control shall be under the supervision of trained personnel or a firm specializing in industrial water conditioning. Such personnel shall be informed that the steam is to be used for culinary purposes. Pretreatment of feed waters for boilers or steam generating systems to reduce water hardness, before entering the boiler or steam generator by ion exchange or other acceptable procedures, is preferable to the addition of conditioning compounds to boiler waters. Only compounds complying with 21 CFR 173.310 may be used to prevent corrosion and scale in boilers, or to facilitate sludge removal.

Greater amounts shall not be used of the boiler water treatment compounds than the minimum necessary for controlling boiler scale or other boiler water treatment purposes. No greater amount of steam shall be used for the treatment and/or pasteurization of milk and milk products than necessary.

It should be noted that tannin, which is also frequently added to boiler water to facilitate sludge removal during boiler blow-down, has been reported to give rise to odor problems, and should be used with caution.

Boiler compounds containing cyclohexylmine, morpholine, octadecylamine, diethylamino-ethanol, trisodium nitrilotriacetae, and hydrazine shall not be permitted for use in steam in contact with milk and milk products.

BOILER OPERATION

A supply of clean, dry saturated steam is necessary for proper equipment operation. Boilers and steam generation equipment shall be operated in such a manner as to prevent foaming, priming, carryover and excessive entrainment of boiler water into the steam. Carryover of boiler water additives can result in the production of milk or milk product off-flavors. Manufacturers' instructions regarding recommended water level and blow-down should be consulted and rigorously followed. The blow-down of the boiler should be carefully watched, so that an over-concentration of the boiler water solids and foaming is avoided. It is recommended that periodic analyses be made of condensate samples. Such samples should be taken from the line between the final steam separating equipment and the point of the introduction of steam into the milk or milk product.

PIPING ASSEMBLIES

Refer to Figures 37 and 38 for suggested piping assemblies for steam infusion or injection. Other assemblies that will assure a clean, dry saturated steam are acceptable.

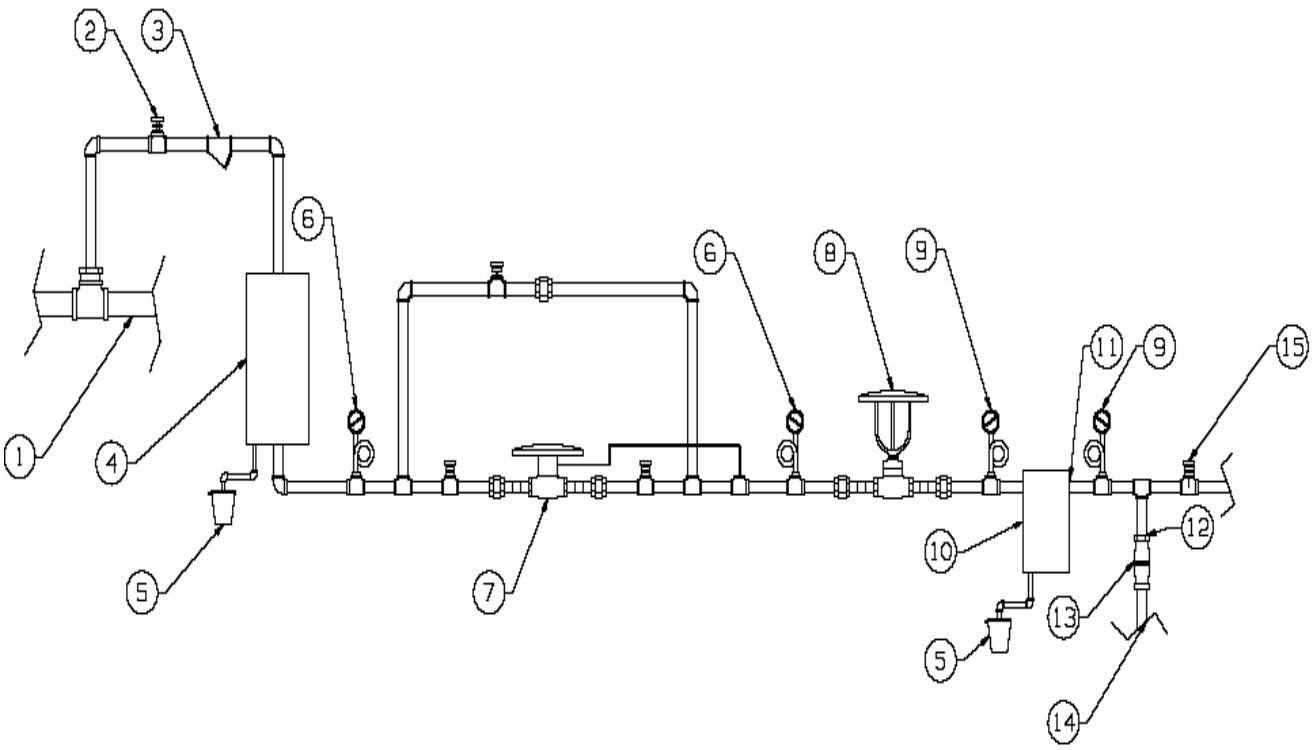

Figure 37. Culinary Steam Piping Assembly for Steam for Steam Infusion or Injection

1. Steam Main
2. Stop Valve
3. Strainer
4.* Entrainment Separator
5.* Condensate Trap
6. Pressure Gauge
7. Steam Pressure Regulating (Reducing) Valve
8. Steam Throttling Valve (Automatic or Manual) or Orifice
9.* Differential Pressure Measuring Device
10.* Filtering Device
11.* Stainless Steel From This Point
12.* Sanitary Piping and Fittings From This Point
13.* Spring-loaded Sanitary Check-Valve
14.* Sanitary Piping to Process Equipment
15.*Sampling Means

* Required Equipment

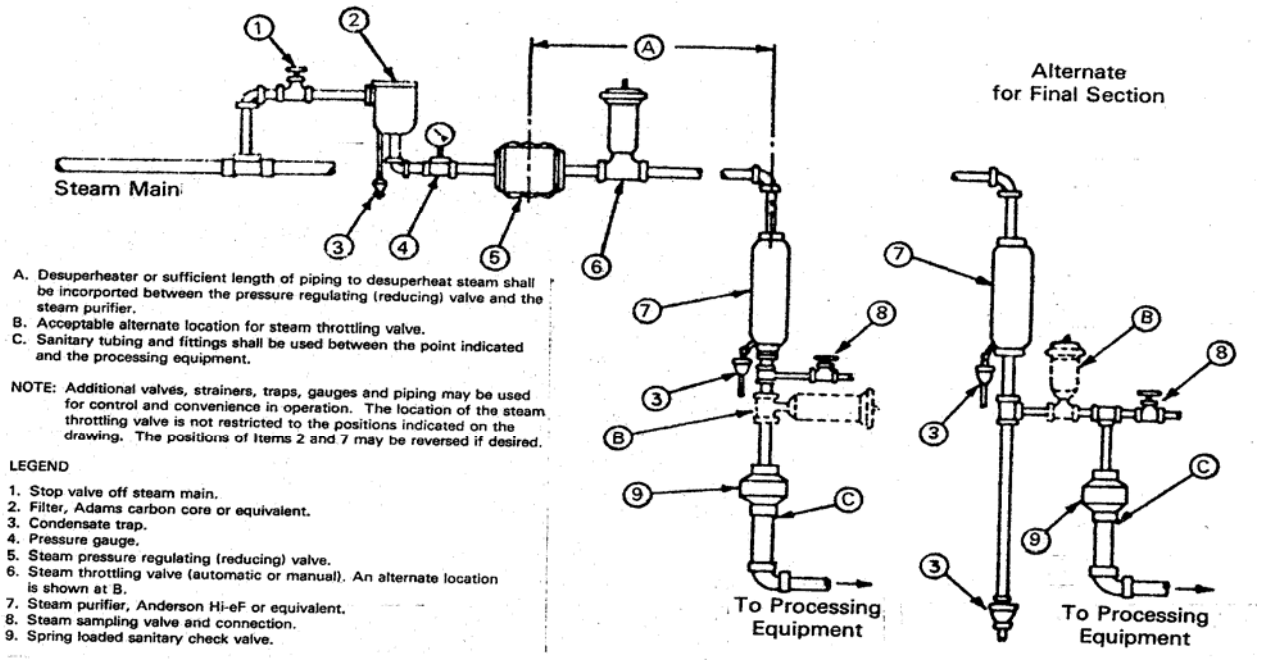

Figure 38. Culinary Steam Piping Assembly for Steam Infusion or Injection (Optional Configuration)

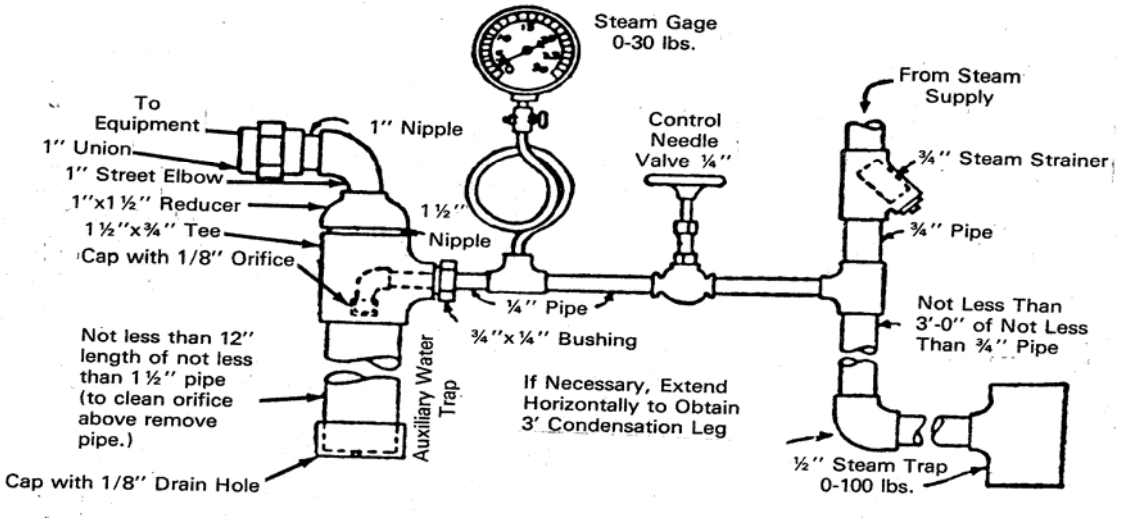

Figure 39. Culinary Steam Piping Assembly for Airspace Heating or Defoaming

IV. THERMOMETER SPECIFICATIONS

INDICATING THERMOMETERS FOR BATCH PASTEURIZERS

Type:

1. Mercury-Actuated; Direct-Reading:
   a. Contained in a corrosion-resistant case, which protects against breakage and permits easy observation of the column and scale.
   b. Filling above mercury - nitrogen or other suitable gas.
   c. The mercury column shall be magnified to an apparent width of not less than 1.6 millimeters (0.0625 of an inch).
2. Digital: Stand Alone:
   a. No more than 0.2ºC (0.5ºF) drift over three (3) months use on a batch pasteurizer compared to a certified temperature source.
   b. Self-diagnostic circuitry, which provides constant monitoring of all sensing, input and conditioning circuits. The diagnostic circuitry should be capable of detecting "open" circuits, "short" circuits, poor connections and faulty components. Upon detection of failure of any component, the device shall blank or become unreadable.
   c. The electromagnetic compatibility of this device for this use shall be documented and available to the Regulatory Agency. The device must be tested to determine the effects of electrostatic discharge, power fluctuation, conductive emission and susceptibility, and radiative emission and susceptibility. The device must comply with the requirements for performance level characteristics of industrial devices. Vendors shall develop protocols for these tests with FDA concurrence.
   d. The effect of exposure to specific environmental conditions shall be documented. The device must be tested to determine the effects of low and high temperatures, thermal shock, humidity, physical shock and salt fog. Vendors shall develop protocols for these tests with FDA concurrence.
   e. Both the probe and the display case shall be constructed so that they may be sealed by the Regulatory Agency.
   f. Calibration of the device shall be protected against unauthorized changes.
   g. The device shall be protected against unauthorized component or sensing element replacement. Replacement of any component or sensing element shall be regarded as a replacement of the indicating thermometer and subject to Regulatory Agency inspection and all application tests under Appendix I. of this *Ordinance*.
   h. The sensing element shall be encased in appropriate material constructed in such a way that the final assembly meets the conditions of Item 11p of this *Ordinance*.
   i. The device must be tested from the sensing probe through the final output.
3. Digital: Combination:
   a. No more than 0.2ºC (0.5ºF) drift over three (3) months use on a batch pasteurizer compared to a certified temperature source.
   b. Self-diagnostic circuitry, which provides constant monitoring of all sensing, input and conditioning circuits. The diagnostic circuitry should be capable of detecting "open" circuits, "short" circuits, poor connections and faulty components. Upon detection of failure of any component, the temperature sensors output signal and indicating display shall go visibly out of range.

c. The electromagnetic compatibility of this device for this use shall be documented and available to the Regulatory Agency. The device must be tested to determine the effects of electrostatic discharge, power fluctuation, conductive emission and susceptibility, and radiative emission and susceptibility. The device must comply with the requirements for performance level characteristics of industrial devices. Vendors shall develop protocols for these tests with FDA concurrence.

d. The effect of exposure to specific environmental conditions shall be documented. The device must be tested to determine the effects of low and high temperatures, thermal shock, humidity, physical shock and salt fog. Vendors shall develop protocols for these tests with FDA concurrence.

e. Both the probe and the display case shall be constructed so that they may be sealed by the Regulatory Agency.

f. Calibration of the device shall be protected against unauthorized changes.

g. The device shall be protected against unauthorized component or sensing element replacement. Replacement of any component or sensing element shall be regarded as a replacement of the indicating thermometer and subject to Regulatory Agency inspection and all application tests under Appendix I. of this *Ordinance*.

h. The sensing element shall be encased in appropriate material constructed in such a way that the final assembly meets the conditions of Item 11p of this *Ordinance*.

i. The device must be tested from the sensing probe through the final output.

Scale: Shall have a span of not less than fourteen (14) Celsius degrees (twenty-five (25) Fahrenheit degrees), including the pasteurization temperature, ± 2.5°C (± 5°F); graduated in 0.5°C (1ºF) divisions, with not more than nine (9) Celsius degrees (sixteen (16) Fahrenheit degrees) per 2.54 centimeters (1 inch) of span; and protected against damage at 105°C (220°F). Provided, that on batch pasteurizers used solely for thirty (30) minute pasteurization of milk and milk products at temperatures above 71°C (160°F), indicating thermometers with 1°C (2°F) scale graduations, with not more than six (6) Celsius degrees (twenty-eight (28) Fahrenheit degrees) per 2.54 centimeters (1 inch) of scale, may be used.

Accuracy: Within ± 0.2°C (± 0.5°F), through the specified scale span. Provided, that on batch pasteurizers used solely for thirty (30) minute pasteurization of milk and milk products at temperatures above 71°C (160°F), indicating thermometers shall be accurate to within ±.5°C (± 1°F). (Refer to Appendix I., Test 1)

Submerged Stem Fitting: A pressure-tight seat against the inside wall of the holder; no threads exposed to milk or milk products; and the location of this seat to conform to the 3-A Sanitary Standard for a wall-type fitting or other equivalent sanitary fitting.

Bulb: Corning normal or equally suitable thermometric glass.

INDICATING THERMOMETERS LOCATED ON PASTEURIZATION PIPELINES

Type:

1. Mercury-Actuated; Direct-Reading:

   a. Contained in a corrosion-resistant case, which protects against breakage and permits easy observation of the column and scale.

   b. Filling above mercury - nitrogen or other suitable gas.

   c. The mercury column shall be magnified to an apparent width of not less than 1.6 millimeters (0.0625 of an inch).

2. Digital:
   a. No more than 0.2°C (0.5°F) drift over three (3) months use on a HTST system compared to a certified temperature source.
   b. Self-diagnostic circuitry, which provides constant monitoring of all sensing, input and conditioning circuits. The diagnostic circuitry should be capable of detecting "open" circuits, "short" circuits, poor connections and faulty components. Upon detection of failure of any component, the device shall blank or become unreadable.
   c. The electromagnetic compatibility of this device for this use shall be documented and available to the Regulatory Agency. The device must be tested to determine the effects of electrostatic discharge, power fluctuation, conductive emission and susceptibility, and radiative emission and susceptibility. The device must comply with the requirements for performance level characteristics of industrial devices. Vendors shall develop protocols for these tests with FDA concurrence.
   d. The effect of exposure to specific environmental conditions shall be documented. The device must be tested to determine the effects of low and high temperatures, thermal shock, humidity, physical shock and salt fog. Vendors shall develop protocols for these tests with FDA concurrence.
   e. Both the probe and the display case shall be constructed so that they may be sealed by the Regulatory Agency.
   f. Calibration of the device shall be protected against unauthorized changes.
   g. The device shall be protected against unauthorized component or sensing element replacement. Replacement of any component or sensing element shall be regarded as a replacement of the indicating thermometer and subject to Regulatory Agency inspection and all applicable tests under Appendix I. of this *Ordinance*.
   h. The sensing element shall be encased in appropriate material constructed in such a way that the final assembly meets the conditions of Item 11p of this *Ordinance*.
   i. The device must be tested from the sensing probe through the final output.

Scale: Shall have a span of not less than fourteen (14) Celsius degrees (twenty-five (25) Fahrenheit degrees), including the pasteurization temperature, ± 2.5°C (± 5°F); and protected against damage at 105°C (220°F), and in the case of thermometers used on HHST systems protected against damage at 149°C (300°F). Mercury actuated thermometers shall be graduated in 0.2°C (0.5°F) divisions with not more than four (4) Celsius degrees (eight (8) Fahrenheit degrees) per 2.54 centimeters (1 inch) of scale. The digital thermometer readout shall display in units no greater than of 0.05°C (0.1°F).

Accuracy: Within ± 0.2°C (± 0.5°F), throughout the specified scale span. (Refer to Appendix I., Test 1)

Stem Fittings: A pressure-tight seat against the inside wall of the fittings; no threads exposed to milk or milk products. The probe is to be designed so that the sensitive area is discernible from the remainder of the stem. The overall probe length to be such that the sensitive area is positioned in the milk or milk product flow path when properly installed.

Thermometric Response: When the thermometer is at room temperature and then is immersed in a well-stirred water bath 11°C (19°F) or less above the pasteurization temperature, the time required for the reading to increase from water bath temperature, minus 11°C (19°F), to water bath temperature, minus 4°C (7°F), shall not exceed four (4) seconds. The digital thermometer displays shall change at a rate that can be noted by the operator or Regulatory Agency during the thermometric lag test. (Refer to Appendix I., Test 7)

Bulb: Corning normal, or equally suitable thermometric glass.

AIRSPACE INDICATING THERMOMETER FOR BATCH PASTEURIZERS

Type:

1. Mercury-Actuated; Direct-Reading:
   a. Contained in a corrosion-resistant case, which protects against breakage and permits easy observation of the column and scale.
   b. The bottom of the bulb chamber shall not be less than 51 millimeters (2 inches) and not more than 89 millimeters (3.5 inches), below the underside of the cover.
   c. Filling above mercury - nitrogen or other suitable gas.
   d. The mercury column shall be magnified to an apparent width of not less than 1.6 millimeters (0.0625 of an inch).
2. Digital: Stand Alone:
   a. No more than 0.2ºC (0.5ºF) drift over three (3) months use on a batch pasteurizer compared to a certified temperature source.
   b. Self-diagnostic circuitry, which provides constant monitoring of all sensing, input and conditioning circuits. The diagnostic circuitry should be capable of detecting "open" circuits, "short" circuits, poor connections and faulty components. Upon detection of failure of any component, the device shall blank or become unreadable.
   c. The electromagnetic compatibility of this device for this use shall be documented and available to the Regulatory Agency. The device must be tested to determine the effects of electrostatic discharge, power fluctuation, conductive emission and susceptibility, and radiative emission and susceptibility. The device must comply with the requirements for performance level characteristics of industrial devices. Vendors shall develop protocols for these tests with FDA concurrence.
   d. The effect of exposure to specific environmental conditions shall be documented. The device must be tested to determine the effects of low and high temperatures, thermal shock, humidity, physical shock and salt fog. Vendors shall develop protocols for these tests with FDA concurrence.
   e. Both the probe and the display case shall be constructed so that they may be sealed by the Regulatory Agency.
   f. Calibration of the device shall be protected against unauthorized changes.
   g. The device shall be protected against unauthorized component or sensing element replacement. Replacement of any component or sensing element shall be regarded as a replacement of the indicating thermometer and subject to Regulatory Agency inspection and all application tests under Appendix I of this *Ordinance*.
   h. The sensing element shall be encased in appropriate material constructed in such a way that the final assembly meets the conditions of Item 11p of this *Ordinance*.
   i. The device must be tested from the sensing probe through the final output.
   j. The bottom of the bulb chamber is not less than 51 millimeters (2 inches) and not more than 89 millimeters (3.5 inches), below the underside of the cover.
3. Digital: Combination:
   a. No more than 0.2ºC (0.5ºF) drift over three (3) months use on a batch pasteurizer compared to a certified temperature source.

b. Self-diagnostic circuitry, which provides constant monitoring of all sensing, input and conditioning circuits. The diagnostic circuitry should be capable of detecting "open" circuits, "short" circuits, poor connections and faulty components. Upon detection of failure of any component, the temperature sensors output signal and indicating display shall go visibly out of range.

c. The electromagnetic compatibility of this device for this use shall be documented and available to the Regulatory Agency. The device must be tested to determine the effects of electrostatic discharge, power fluctuation, conductive emission and susceptibility, and radiative emission and susceptibility. The device must comply with the requirements for performance level characteristics of industrial devices. Vendors shall develop protocols for these tests with FDA concurrence.

d. The effect of exposure to specific environmental conditions shall be documented. The device must be tested to determine the effects of low and high temperatures, thermal shock, humidity, physical shock and salt fog. Vendors shall develop protocols for these tests with FDA concurrence.

e. Both the probe and the display case shall be constructed so that they may be sealed by the Regulatory Agency.

f. Calibration of the device shall be protected against unauthorized changes.

g. The device shall be protected against unauthorized component or sensing element replacement. Replacement of any component or sensing element shall be regarded as a replacement of the indicating thermometer and subject to Regulatory Agency inspection and all application tests under Appendix I. of this *Ordinance*.

h. The sensing element shall be encased in appropriate material constructed in such a way that the final assembly meets the conditions of Item 11p of this *Ordinance*.

i. The device must be tested from the sensing probe through the final output.

j. The bottom of the bulb chamber is not less than 51 millimeters (2 inches) and not more than 89 millimeters (3.5 inches), below the underside of the cover.

Scale: Shall have a span of not less than fourteen (14) Celsius degrees (twenty-five (25) Fahrenheit degrees), including the pasteurization temperature of 66°C (150°F), ± 2.5°C (± 5°F); graduated in not more than 1°C (2°F) divisions, with not more than nine (9) Celsius degrees (sixteen (16) Fahrenheit degrees) per 2.54 centimeters (1inch) of scale; and protected against damage at (105°C) 220°F.

Accuracy: Within ± 0.5°C (± 1°F), throughout the specified scale span. (Refer to Appendix I., Test 1)

Stem Fittings: A pressure-tight seat or other suitable sanitary fitting with no threads exposed.

RECORDING THERMOMETERS FOR BATCH PASTEURIZERS

1. UTILIZING TEMPERATURES LESS THAN 71°C (160°F)

Case: Moisture proof under normal operating conditions in milk plants.

Scale: Shall have a span of not less than eleven (11) Celsius degrees (twenty (20) Fahrenheit degrees), including pasteurization temperature, ± 2.5°C (± 5°F); and graduated in temperature-scale divisions of 0.5°C (1°F), spaced not less than 1.6 millimeter (0.0625 of an inch) apart between 60°C (140°F) and 69°C (155°F). Provided, that temperature-scale divisions of 0.5°C (1°F), spaced not less than 1millimeter (0.040 inch) apart, are permitted when the ink line is thin

enough to be easily distinguished from the printed line; graduated in time-scale divisions of not more than ten (10) minutes; and having a chord of straight-line length of not less than 6.3 millimeters (0.25 inches), between 63°C (145°F) and 66°C (150°F).
Temperature Accuracy: Within ± 0.5°C (± 1° F), between 60°C (140°F) and 69°C (155°F). (Refer to Appendix I., Test 2)
Time Accuracy: The recorded elapsed time, as indicated by the chart rotation, shall not exceed the true elapsed time, as compared to an accurate watch, over a period of at least thirty (30) minutes at pasteurization temperature. Recorders for batch pasteurizers may be equipped with spring operated or electrically operated clocks. (Refer to Appendix I., Test 3)
Pen-Arm Setting Device: Easily accessible and simple to adjust.
Temperature Sensing Device: Protected against damage at a temperature of 105°C (220°F).
Submerged Stem Fitting: A pressure-tight seat against the inside wall of the holder; no threads exposed to milk or milk products; and the distance from the underside of the ferrule to the sensitive portion of the bulb to be not less than 76 millimeters (3 inches).
Chart Speed: A circular chart shall make one (1) revolution in not more than twelve (12) hours. Two (2) charts shall be used if operations extend beyond twelve (12) hours in one day. Circular charts shall be graduated for a maximum record of twelve (12) hours. Strip-charts may show a continuous recording over a twenty-four (24) hour period.
Chart Support Drive: The rotating chart support drive shall be provided with a pin to puncture the chart in a manner to prevent its fraudulent rotation.

2. **UTILIZING TEMPERATURES GREATER THAN 71ºC (160ºF)**

Batch pasteurizers used solely for thirty (30) minute pasteurization of milk and milk products at temperature above 71°C (160°F) may use recording thermometers with the following options:

Scale: Graduated in temperature scale divisions of 1°C (2°F), spaced not less than 1 millimeter (.040 inch) apart between 65°C (150°F) and 77°C (170°F); graduated in time-scale divisions of not more than fifteen (15) minutes; and having a chord of straight-line length of not less than 6.3 millimeters (0.25 inch) between 71°C (160°F) and 77°C (170°F).
Temperature Accuracy: Within ± 1°C (± 2° F), between 71°C (160°F) and 77°C (170°F).
Chart Speed: A circular chart shall make one (1) revolution in not more than twenty-four (24) hours and shall be graduated for a maximum record of twenty-four (24) hours.

RECORDER/CONTROLLERS FOR CONTINUOUS PASTEURIZERS

Case: Moisture proof under normal operating conditions in milk plants.
Chart Scale: Shall have a span of not less than seventeen (17) Celsius degrees (thirty (30) Fahrenheit degrees), including the temperature at which diversion is set, ± 7°C (± 12°F); graduated in temperature scale divisions of 0.5°C (1°F), spaced not less than 1.6 millimeter (0.0625 inch) apart at the diversion temperature, ± 0.5°C (± 1°F). Provided, that temperature-scale divisions of 0.5°C (1°F), spaced not less than 1 millimeter (0.040 inch) apart, are permitted when the ink line is thin enough to be easily distinguished from the printed line; graduated in time-scale divisions of not more than fifteen (15) minutes; and having an equivalent fifteen (15) minute chord or straight-line length of not less than 6.3 millimeters (0.25 inch) at the diversion temperature, ± 0.5°C (± 1°F).

Temperature Accuracy: Within ± 0.5°C (± 1°F), at the temperature, ± 3°C (± 5°F), at which the controller is set to divert. (Refer to Appendix I., Test 2)
Power Operated: All recorder/controllers for continuous pasteurization shall be electrically operated.
Pen-Arm Device: Easily accessible and simple to adjust.
Pen and Chart Paper: Pen designed to give a line not over .07 millimeter (0.025 inch) wide and easy to maintain.
Temperature Sensing Device: Bulb, tube, spring or thermistor, protected against damage at a temperature of 105°C (220°F). Provided, that the recorder/controller temperature sensing devices, used on HHST systems, shall be protected against damage at temperatures of 149°C (300°F).
Stem Fitting: Pressure-tight seat against the inside wall of the pipe; no threads exposed to milk or milk products; and the distance from the underside of the ferrule to the sensitive portion of the bulb is to be not less than 76 millimeters (3 inches).
Chart Speed: A circular chart shall make one (1) revolution in not more than twelve (12) hours. Two (2) charts shall be used if operations extend beyond twelve (12) hours in one (1) day. Circular charts shall be graduated for a maximum record of twelve (12) hours. Strip-charts may show a continuous recording over a twenty-four (24) hour period.
Frequency Pen: The recorder/controller shall be provided with an additional pen-arm located on the outer edge of the chart, for recording the time at which the FDD is in the forward or diverted-flow position. The chart time line shall correspond with the reference arc, and the recording pen shall rest upon the time line matching the reference arc.
Controller: Actuated by the same sensor as the recorder pen, however the cut-in and cut-out response shall be independent of pen-arm movement.
Controller Adjustment: A mechanism for the adjustment of the response temperature. It shall be designed so that the temperature setting cannot be altered or the controller manipulated without detection.
Thermometric Response: With the recorder/controller bulb at room temperature and then immersed in sufficiently agitated water or oil bath at 4ºC (7ºF) above the cut-in point, the interval between the moment when the recording thermometer reads 7ºC (12ºF) below the cut-in temperature and the moment of power cut-in shall be not more than five (5) seconds. (Refer to Appendix I., Test 8)
Chart Support Drive: The rotating chart support drive shall be provided with a pin to puncture the chart in a manner to prevent its fraudulent rotation.

INDICATING THERMOMETERS USED IN STORAGE TANKS

Scale Range: Shall have a span not less than twenty-eight (28) Celsius degrees (fifty (50) Fahrenheit degrees), including normal storage temperatures, ± 3°C (± 5°F), with an extension of scale on either side permitted, and graduated in not more than 1°C (2°F) divisions.
Temperature Scale Division: Spaced not less than 1.6 millimeters (0.0625 inch) apart between 2°C (35°F) and 13°C (55°F).
Accuracy: Within ± 1°C (± 2°F) throughout the specified scale range.
Stem Fitting: A pressure-tight seat or other suitable sanitary fittings with no threads exposed.

RECORDING THERMOMETERS USED IN STORAGE TANKS

Case: Moisture proof under operating conditions in milk plants.
Scale: Shall have a scale span of not less than twenty-eight (28) Celsius degrees (fifty (50) Fahrenheit degrees) including normal storage temperature, ± 3°C (± 5°F), graduated in not more than 1°C (2°F) divisions. Lines spaced not less than 1 millimeter (0.040 inch) apart, are permitted when the ink line is thin enough to be easily distinguished from the printed line. They shall be graduated in time scale divisions of not more than one (1) hour, having a chord of straight-line length of not less than 3.2 millimeters (0.125 inch) at 5°C (40°F). These charts must be capable of recording temperatures up to 83°C (180°F). Span specifications do not apply to extensions beyond 38°C (100°F).
Temperature Accuracy: Within ± 1°C (± 2°F), between the specified range limits.
Pen-Arm Setting Device: Easily accessible and simple to adjust.
Pen and Chart Paper: Designed to make a line not over .635 millimeters (0.025 inch) wide when in proper adjustment and easy to maintain.
Temperature Sensor: Protected against damage at 100°C (212°F).
Stem Fittings: A pressure-tight seat or other suitable sanitary fitting with no threads exposed.
Chart Speed: The circular chart shall make one (1) revolution in not more than seven (7) days and shall be graduated for a maximum record of seven (7) days. Strip chart shall move not less than 2.54 centimeters (1 inch) per hour and may be used continuously for one (1) calendar month.

RECORDING THERMOMETERS ON MECHANICAL CLEANING SYSTEMS

Location: Temperature sensor is in the return solution line downstream from the process.
Case: Moisture proof under operation conditions.
Scale: Shall have a range from 16°C (60°F) to 83°C (180°F), with extensions of scale on either side permissible and graduated in time-scale divisions of not more than fifteen (15) minutes. The chart is to be graduated in temperature divisions of not more than 1°C (2°F), spaced not less than 1.6 millimeters (0.0625 inch) apart, above 44°C (110°F). Provided, that temperature-scale divisions of 1°C (2°F), spaced not less than 1 millimeter (0.040 inch) apart, are permitted when the ink line is thin enough to be easily distinguished from the printed line.
Temperature Accuracy: Within ± 1°C (± 2°F), above 44°C (110°F).
Pen-Arm Setting Device: Easily accessible and simple to adjust.
Pen and Chart Paper: Designed to make a line not over .635 millimeters (0.025 inch) wide and easy to maintain.
Temperature Sensor: Protected against damage at 100°C (212°F).
Stem Fitting: A pressure-tight seat against the inside wall of the pipe with no threads exposed to solution.
Chart Speed: Circular charts shall make one (1) revolution in not more than twenty-four (24) hours. Strip charts shall not move less than 25 millimeters (1 inch) per hour. More than one (1) record of the cleaning operation shall not overlap on the same section of the chart for either circular- or strip-type charts.

INDICATING THERMOMETERS USED IN REFRIGERATED ROOMS WHERE MILK AND MILK PRODUCTS ARE STORED

Scale Range: Shall have a span not less than twenty-eight (28) Celsius degrees (fifty (50) Fahrenheit degrees), including normal storage temperatures, ± 3°C (± 5°F), with extensions of scale on either side permitted if graduated in not more than 1°C (2°F) divisions.
Temperature Scale Divisions: Spaced not less than 1.6 millimeters (0.0625 inches) apart between 0°C (32°F) and 13°C (55°F).
Accuracy: Within ± 1°C (± 2°F), throughout the specified scale ranges.

SPECIFICATIONS FOR RECORDING pH METER FOR USE ON AUTOMATED MECHANICAL CLEANING SYSTEMS FOR EVAPORATORS

Location: pH sensor shall be located in the return line downstream from processing equipment and all lines included in the mechanical cleaning circuit.
Case: Moistureproof under operating conditions.
Scale: It shall have a range of pH value from two (2) to twelve (12), with extensions of scale on either side permissible, and graduated in time scale divisions of not more than fifteen (15) minutes. The chart is to be graduated in pH divisions of not more than 0.5 pH values and spaced not less than 1.6mm (0.0625 of an inch) apart.
pH Accuracy: Within 0.5, plus or minus pH values.
Pen-Arm Setting Device: Easily accessible; simple to adjust.
Pen and Chart Paper: Designed to mark a line not over 0.635mm (0.025 of an inch) wide; easy to maintain.
pH Sensor: Protected against damage at 83°C (180°F).
Chart Speed: Circular charts shall make one (1) revolution in not more than twenty-four (24) hours. Strip charts shall not move slower than 25mm (1 inch) per hour. More than one (1) record of the cleaning operation shall not overlap on the same section of the chart for either circular or strip-type charts.

V. CRITERIA FOR THE EVALUATION OF COMPUTERIZED SYSTEMS FOR GRADE 'A' PUBLIC HEALTH CONTROLS

BACKGROUND

Computer systems are commonly used to manage the functions of public health control devices (valves, pumps, etc.) that operate milk pasteurization systems. These computer systems may be programmed for monitoring and controlling the instrumentation of HTST and HHST pasteurizers. They may also control the operational state of devices such as the flow diversion devices (FDDs), booster pumps, etc. While this technology can furnish numerous advantages throughout the manufacturing process, the public health computer system should essentially just replace its hard-wired counterpart. These computer systems are evaluated similar to hard-wired systems and all of the required public health controls must meet the established PMO criteria.
Computers are different from hard-wired controls in three (3) major categories. To provide adequate public health protection, the design of computerized public health controls must address these three (3) major differences.

First, unlike conventional hard-wired systems, which provide full-time monitoring of the public health controls, the computer performs its tasks sequentially, and the computer may be in real time contact with the FDD for only one (1) millisecond. During the next one hundred (100) milliseconds, or however long it takes the computer to cycle one (1) time through its tasks, the FDD remains in forward-flow, independent of temperature in the holding tube. Normally, this is not a problem, because most computers can cycle through one hundred (100) steps in their program, many times during one (1) second. The problem occurs when the public health computer is directed away from its tasks by another computer; or the computer program is changed; or a seldom used JUMP, BRANCH, or GOTO Instruction diverts the public health computer away from its tasks.

Second, in a computerized system, the control logic is easily changed because the computer program is easily changed. A few keystrokes at the keyboard will completely change the control logic of the computer program. Sealing the access to the public health computer's programming function can solve the problem addressed above. A procedure is needed to ensure that the public health computer has the correct program when the Regulatory Agency reseals the public health computer.

Finally, for public health controls, the public health computer program must and can be made error-free, since the programs required for public health control are relatively brief. This is accomplished by attempting to keep the public health computer program simple and of limited control scope.

GLOSSARY

Address: A numerical label on each memory location of the computer. The computer uses this address when communicating with the input or output.

Computer: A very large number of on-off switches arranged in a manner to sequentially perform logical and numerical functions.

Default Mode: The pre-described position of some memory locations during start-up and standby operations of the computer.

EAPROM: An **E**lectrically **A**lterable, **P**rogrammable, **R**ead-**O**nly **M**emory. Individual memory locations may be altered without erasing the remaining memory.

EEPROM: An **E**lectrically **E**rasable **P**rogrammable, **R**ead-**O**nly **M**emory. The entire memory is erased with one (1) electrical signal.

EPROM: An **E**rasable, **P**rogrammable, **R**ead-**O**nly **M**emory. The entire memory is erased by exposure to ultra-violet light.

Fail-Safe: Design considerations that cause the instrument or system to move to the safe position upon failure of electricity, air, or other support systems.

Field Alterable: A device having a specific design or function that is readily changed by the user and/or the maintenance personnel.

FDD: The common acronym used for flow-diversion valves or devices on pasteurization systems.

Force Off: A programmable computer instruction that places any input or output in the "off" state, independently of any other program instructions.

Force On: A programmable computer instruction that places any input or output in the "on" state, independently of any other program instructions.

Human Machine Interface: Often referred to as operator interface, this computer station allows personnel monitoring and control of the computer system normally by use of a touch screen or keyboard.
Input: Electrical signals applied to the computer and used by the computer to make logical decisions on whether or not to activate one or more outputs. Input consists of data from temperature and pressure instruments, liquid level controls, micro-switches, and operator-controlled panel switches.
Input/Output Terminals: The electrical panel that provides for connection of all the inputs and outputs to the computer. The input/output address labels are found on this panel. Indicator lights showing the status, “on” or “off”, of all inputs and outputs may be available on this panel. This terminal is typically located on the computer and is commonly know as a “bus”.
Ladder Logic Diagram: A programming language typically used for industrial computers commonly used and applied to milk pasteurization systems.
Last State Switch: A manually operated switch or software setting that instructs the computer to place all outputs in the "on", "off", or "last state" condition during a start-up. The "last state" position instructs the computer to place the outputs in whatever state, on or off, occurred during the last loss of power.
Operator Override Switch: A manually operated switch that permits the operator to place any input or output in the “on” or “off” position, independently of any program instructions.
Output: Electrical signals from the computer that turn on or off valves, motors, lights, horns, and other devices being controlled by the computer. Outputs may also consist of messages and data to the operator.
Programmable Logic Controller (PLC): Also known as PLC’s, this is a computer commonly used to control industrial machines, instruments, and processes.
RAM: Random **A**ccess **M**emory is memory used by the computer to run programs; store data; read input and control outputs. The computer may either read data from the memory or write data into the memory.
ROM: Read-**O**nly **M**emory is memory used by the computer to run its own internal unchangeable programs. The computer may only read from the memory. It cannot write into the memory or alter the memory in any way.
RTD: Resistance Temperature Detector
Standby Status: The computer is turned on, running, and waiting for instructions to start processing input data. A manually operated switch usually accomplishes this instruction.
Status Printing: Some computers are programmed to interrupt printing of the chart record and print the status of key set points and conditions such as: cold milk temperature, holding tube temperature, diversion temperature setting and chart speed.

CRITERIA

The following listed criteria shall be complied with for all computers when applied to HTST and HHST pasteurization systems used for Grade 'A' milk and milk products. In addition, all systems shall conform to all other existing requirements of this *Ordinance*.

1. A computer or a PLC used for the public health control of a pasteurizer must be dedicated only to the public health control of that individual pasteurizer. The public health computer shall have no other assignments involving the routine operation of the milk plant. Computer functions

peripheral to the public health controls, such as CIP valve cycling, may be acceptable, provided it does not compromise the public health functionality of the public health computer or pasteurization system and all PMO requirements and safeguards are not compromised.

2. The public health computer and its outputs shall not be under the command or control of any other computer system or Human Machine Interface. It shall not have an address that is addressable by any other computer system. A host computer cannot override its commands or place it on standby status. All addresses of the public health computer must be ready to process data at any time.

3. A separate public health computer must be used on each HTST and HHST system. Only the public health computer may provide control over the public health devices and functions of the HTST and HHST system. Any other computer or Human Machine Interface may request a function of a device (valve, pump, etc.) within the HTST or HHST system through a hard-wired input, however this request would be granted or denied by the logic in the public health computer depending on the current status of the computer program and public health (PMO) requirements.

4. The status of the inputs and outputs of the public health computer may be provided as inputs only to other computer systems and all public health outputs or devices shall be controlled by direct hard-wiring from the output terminal bus of the computer to the device. This includes solenoids and motors located within the HTST or HHST system. The wiring connections must be provided with isolation protection such as relays, diodes, or optical-coupling devices to prevent the public health outputs from being driven by the other computer system. Digital outputs from another computer may be connected to an input of the public health computer in order to request the operation of a device controlled by the public health computer.

5. Upon loss of power to the public health computer all public health controls must assume the fail-safe position. Most computers can be placed in standby status by either a program instruction or manual switches. When the public health computer is in standby status, all public health controls must assume the fail-safe position. Some computers have internal diagnostic checks that are performed automatically during start-up. During this time, the public health computer places all outputs in default mode. In this default mode, all public health controls must be in the fail-safe position. The status of outputs or inputs of the public health computer may provide status to another computer for informational purposes. This shall only be accomplished through a hard-wired output (separate from any control output) from the public health computer to an input on another computer system. No other communication from the public health computer is allowed.

6. Some computers and/or programmable controllers (PLC's) have Input/Output terminals (buses) with "last state switches" that permit the designer to decide what state the output bus will take on power-up, after a shutdown, or loss of power. The choices are "on", "off", or "last state" occurring when the computer lost power. These "last state switches" must be placed in the "fail-safe" or "off" position. Upon loss of power to the computer, all public health controls must assume the fail-safe position. Most computers can be placed in standby status by either a program instruction or manual switches. The public health computer shall have its manual switch in the position that maintains all outputs in the "off" state during any operations except normal program execution.

7. A computer performs its tasks sequentially, and for most of real time the computer outputs are locked in the "ON" or "OFF" position, while waiting for the computer to come back through the cycle. Consequently, the public health computer program must be written so that it monitors all inputs and updates all outputs on a precise schedule, at least once every second. Most

computers will be capable of performing this function many times in one (1) second. Program instructions may not exist within the public health computer program that are capable of altering the scan order of the logic, or distract focus from this order. These would include “JUMP” or “GOTO” type instructions

8. The computer program used to control the required public health functions of HTST or HHST pasteurizers must be stored in some form of read-only memory (ROM) and be available when the public health computer is turned on. The use of tapes or disks are not acceptable.

9. The public health computer program access must be sealed. Any telephone modem accesses must also be sealed. If the Input/Output terminals contain "last state switches", the Input/Output terminals must be sealed. The vendor must supply the Regulatory Agency with test procedures and instructions to verify that the program currently in use by the public health computer is the correct program. Typically this is made available by providing a copy of the program that controls the public health computer of the HTST or HHST pasteurizer. The Regulatory Agency will use this test procedure to confirm that the correct program is in use during a start-up, normal operation, and whenever the seal is broken. Challenging the system during normal operation could involve challenging the inter-wiring requirements through the CIP computer. One (1) method could include attempting access to the booster pump through the CIP computer. With the FDD mode selector in “PROCESS” or “PRODUCT” position, attempt to access the booster pump using the CIP computer. Public health controls in pasteurizers that may be compromised by such a challenge, must be altered or re-programmed so this compromise is prevented and the access to this computer program must be sealed by the Regulatory Authority. Similar challenges may be performed on other required public health functions that are computer controlled.

10. If the public health computer contains FORCE-ON, FORCE-OFF functions, the public health computer must provide indicator lights showing the status of the FORCE-ON, FORCE-OFF function. The vendor’s instructions must remind the Regulatory Agency that all FORCE-ON, FORCE-OFF functions must be cleared before the public health computer is sealed by the Regulatory Agency.

11. The Input/Output terminals of the public health computer shall contain no operator override switches that are accessible without compromising a regulatory seal.

12. Computerized systems that provide for printing the pasteurizer recording chart by the public health computer must ensure that the required calibration is maintained. During chart printing, the public health computer must not be diverted from its tasks for more than one (1) second. Upon returning to public health control tasks, the public health computer shall complete at least one (1) full cycle of its public health tasks before returning to chart printing.

13. When printing a chart, some systems may provide status reports on the chart paper of selected Input/Output conditions. This is usually done by interrupting the printing of the chart and printing the Input/Output conditions. Such interruptions for status printing are permitted only when a continuous record is recorded on the chart. When an interruption is initiated the time of the start of the interruption will be printed on the chart, at the beginning of the interruption and at the end of the interruption. The time interval during which the public health computer is diverted from its public health tasks for status printing shall not exceed one (1) second. Upon returning to public health tasks, the public health computer shall complete at least one (1) full cycle of its public health tasks before returning to status printing.

14. When the public health computer prints the holding tube temperature trace at specific intervals, rather than a continuously changing line, temperature readings shall be printed not less than once every five (5) seconds. In addition, during the recorder/controller thermometric

response test, the temperature shall be printed or indicated at a time rate sufficient to allow the Regulatory Agency official to measure the 7ºC (12ºF) rise in temperature as described in TEST 8. RECORDER/CONTROLLER-THERMOMETRIC RESPONSE.

15. When the public health computer prints the event pen position, the position of the FDD, either forward or divert at specific intervals, rather than continuously, all changes of position shall be recognized by the public health computer and printed on the chart. In addition, the event pen position and temperature in the holding tube must be printed on the chart in a manner that the temperature in the holding tube can be determined at the moment of a change in position of the FDD.

16. The vendor shall provide a built-in program for test procedures or a protocol shall be provided so that all applicable public health tests, contained within Appendix I. of this *Ordinance,* can be performed by the Regulatory Agency for each instrument, i.e.:

a. Recording Thermometers: Temperature accuracy; time accuracy; check against indicating thermometer and thermometric response.

b. FDD: Valve seat leakage; operation of valve stem(s); device assembly; manual diversion; response time and time delay intervals if used.

c. Booster Pumps: Proper wiring and proper pressure control settings.

d. Flow-Promoting Devices Capable of Generating Flow Through the Holding Tube: Are installed with proper wiring interlocks.

17. Computers require high quality; clean, well-regulated power supplies to operate reliably and safely. Spurious voltage spikes can cause unwanted changes in public health computer RAM. To assure the public health computer will execute its functions error free the following items parameters must be considered:

a. A "clean" power source that is relatively free of spikes, interference and other irregularities shall be supplied to the public health computer.

b. The correct program should be confirmed at the time of sealing. (Refer to the criteria cited within #9 of this Section).

c. The output bus "last state" switch should be in the "off" or "fail-safe" position which will stop all functions of the HTST or HHST pasteurizer in case of a spurious program error.

d. All public health computer outputs shall not have any operator override switches and must be wired in a manner that only allows the public health PLC complete control.

Some mechanical and electrical components also deteriorate with age. One (1) solution is to have two (2) permanent programs in the public health computer; one (1) in RAM and one (1) in ROM. Through a self-diagnostic test, these two (2) programs could be compared routinely. If there were differences in the programs, the public health computer would go into default mode. Another solution would be to download the program from ROM to RAM at every start-up. A third solution could be to have the public health computer read the program directly from unchangeable ROM. However, this approach is practical only in large volume (home appliances, etc.) applications. For most small volume applications, the ROM's are field alterable, such as EPROMS, EEPROMS and EAPROMS. These types of computer programs cannot be relied upon to maintain a permanent record. It is necessary that the installer or designer for the public health PLC ensure that the proper program is in the public health computer memory before the Regulatory Agency seals the computer.

18. Computer programs used for public health controls on pasteurizers must conform to the attached logic diagrams. Minor modifications to these diagrams are permissible to accommodate

or delete items that are unique to a specific pasteurization system. For example on meter based timing systems when the FDD selector switch is placed in the CIP position:

a. A minimum ten (10) minute time delay is required for the FDD to remain in diverted flow; and

b. During this time delay the booster pump must shut down and remain off for ten (10) minutes and then the Programmed CIP Operation is allowed to fully perform all the cleaning functions for the HTST or HHST system, including allowing the timing pump, the separator, and the booster/stuffer pump to run during cleaning operations and the FDD to pulse or cycle.

19. The ladder logic diagrams for the FDD and the booster pump show a programmed mechanical cleaning cycle operation as part of the computerized system. Some milk plant operators may wish to use another computer for mechanical cleaning operations, so that milk plant personnel, may change mechanical cleaning programs. When using this method, the connections between the FDD, booster pump, and milk plant computer, must be provided with solenoid relays or similar devices for the FDD and booster pump outputs. This prevents them from being operated by the milk plant computer, except when the mode switch of the FDD is in the "CIP" position and all applicable requirements have been satisfied.

20. The vendor shall provide to the Regulatory Agency a protocol and documentation as follows:

a. Wiring diagrams of those controllers, instruments, and devices pertaining to the public health computer.

b. The computer ladder logic printout and/or storage device (programmed ROM chip, etc.) identical to the public health computer that controls the pasteurizer. This is usually in the form of ladder line logic for each component of the pasteurization system(s) and may include programming for CIP and other functions.

c. A user manual including testing procedures and instructions as required in Criteria #9 of this Section.

DIAGRAMS LEGEND

t	=	Time
T	=	Temperature
MS	=	Microswitch
FDV	=	Flow Divert Valve
FDD	=	Flow-Diversion Device
LOSA	=	Loss of Signal / Low Flow Alarm
HFA	=	High Flow Alarm
STLR	=	Safety Thermal Limit Recorder-Controller

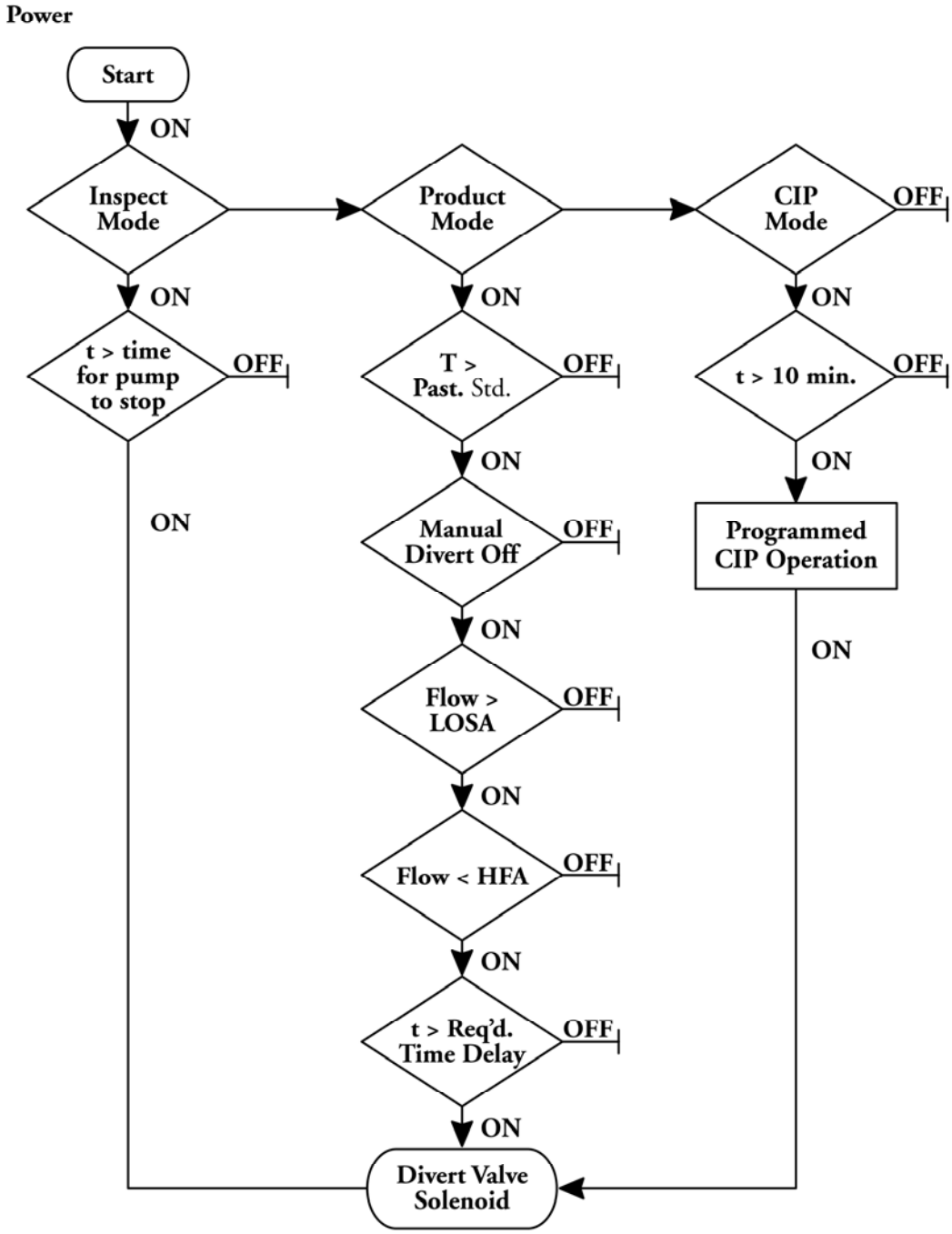

Figure 40. Logic Diagram: HTST Flow Diversion Device, Divert Valve Stem

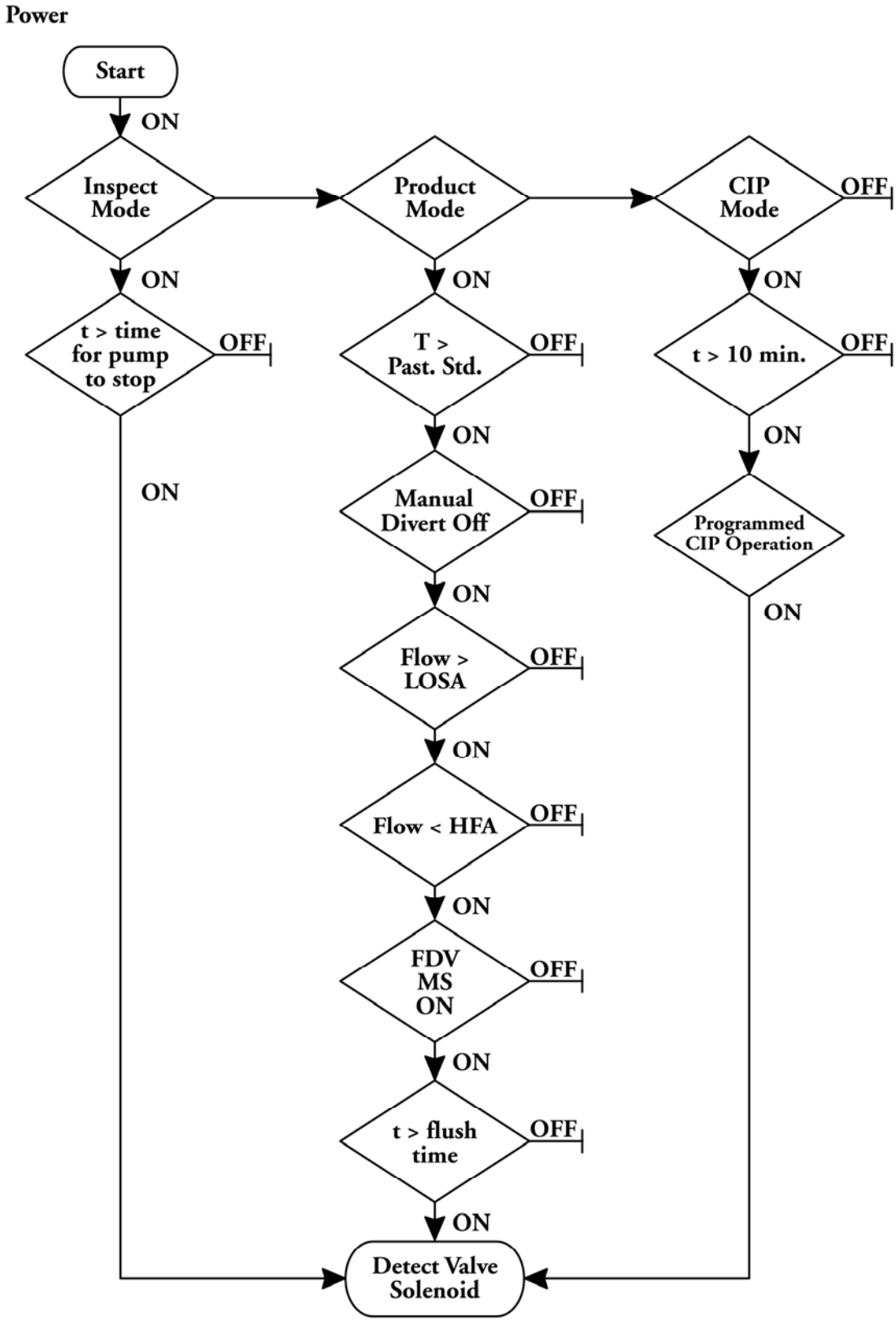

Figure 41. Logic Diagram: HTST Flow-Diversion, Leak-Detect Valve Stem

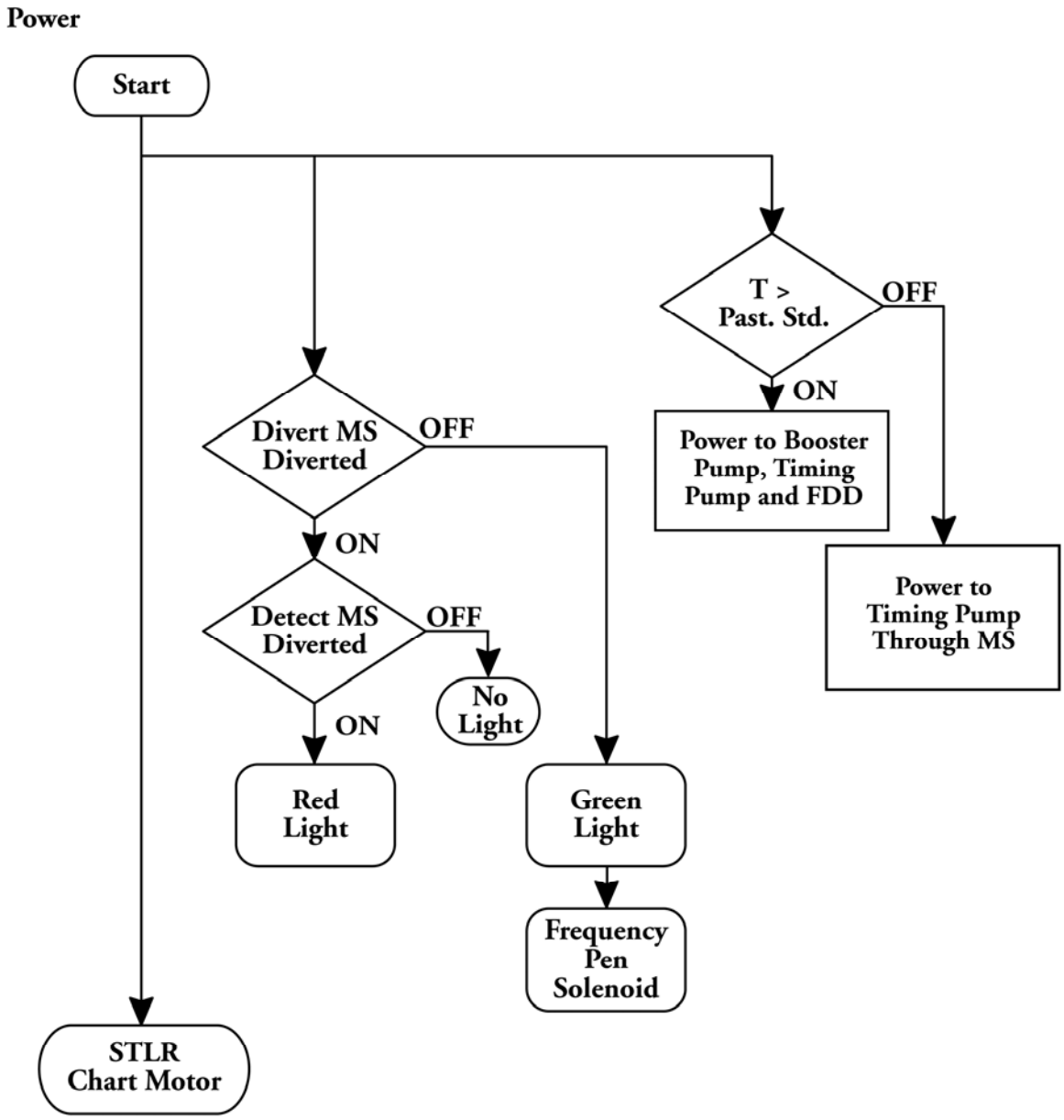

Figure 42. Logic Diagram: HTST Safety Thermal Limit Recorder-Controller

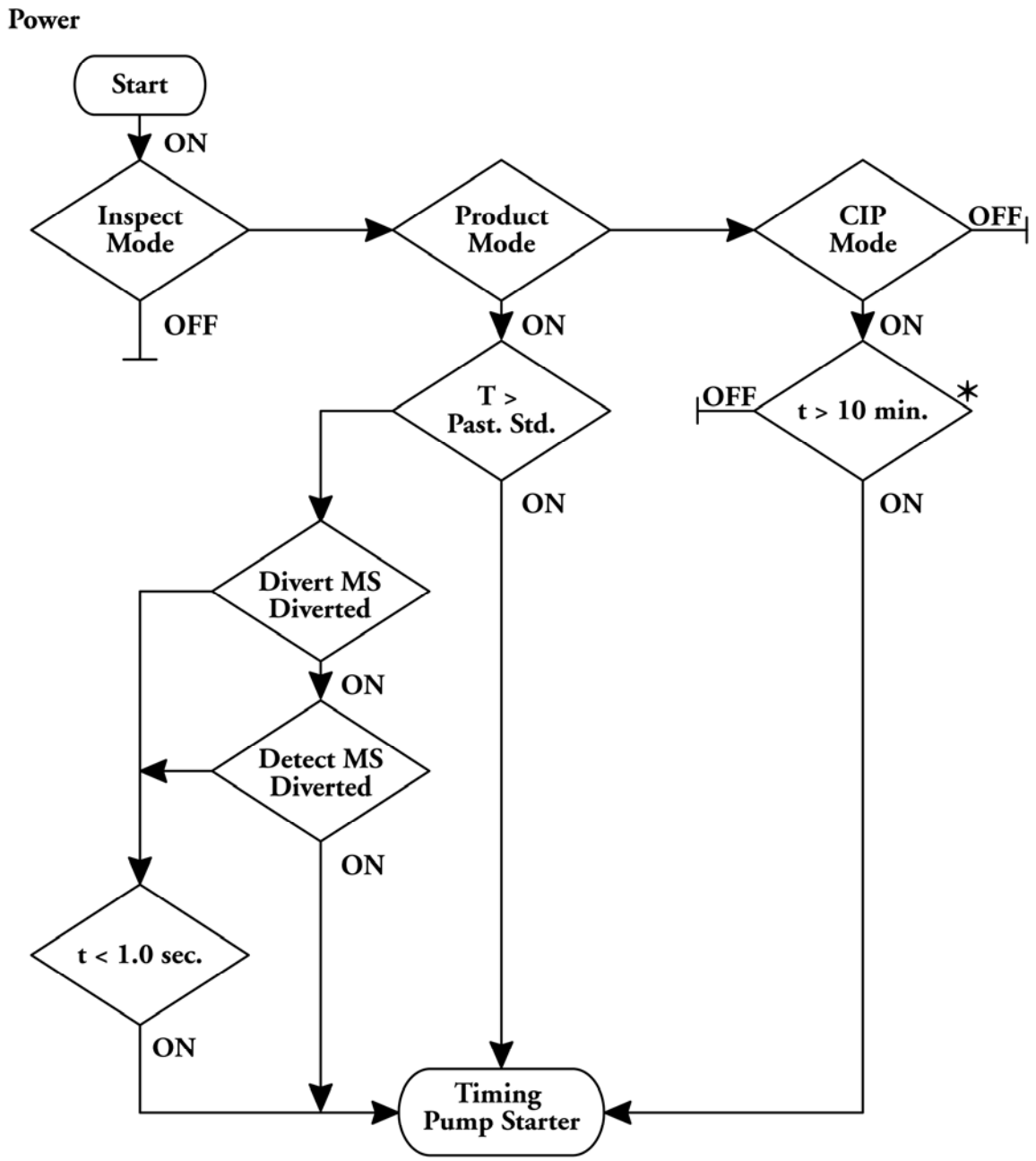

* This diamond (condition) is not necessary, if the 10 min. time relay is not used for a condition of these flow promoters to operate during CIP.

Figure 43. Logic Diagram: HTST Timing Pump

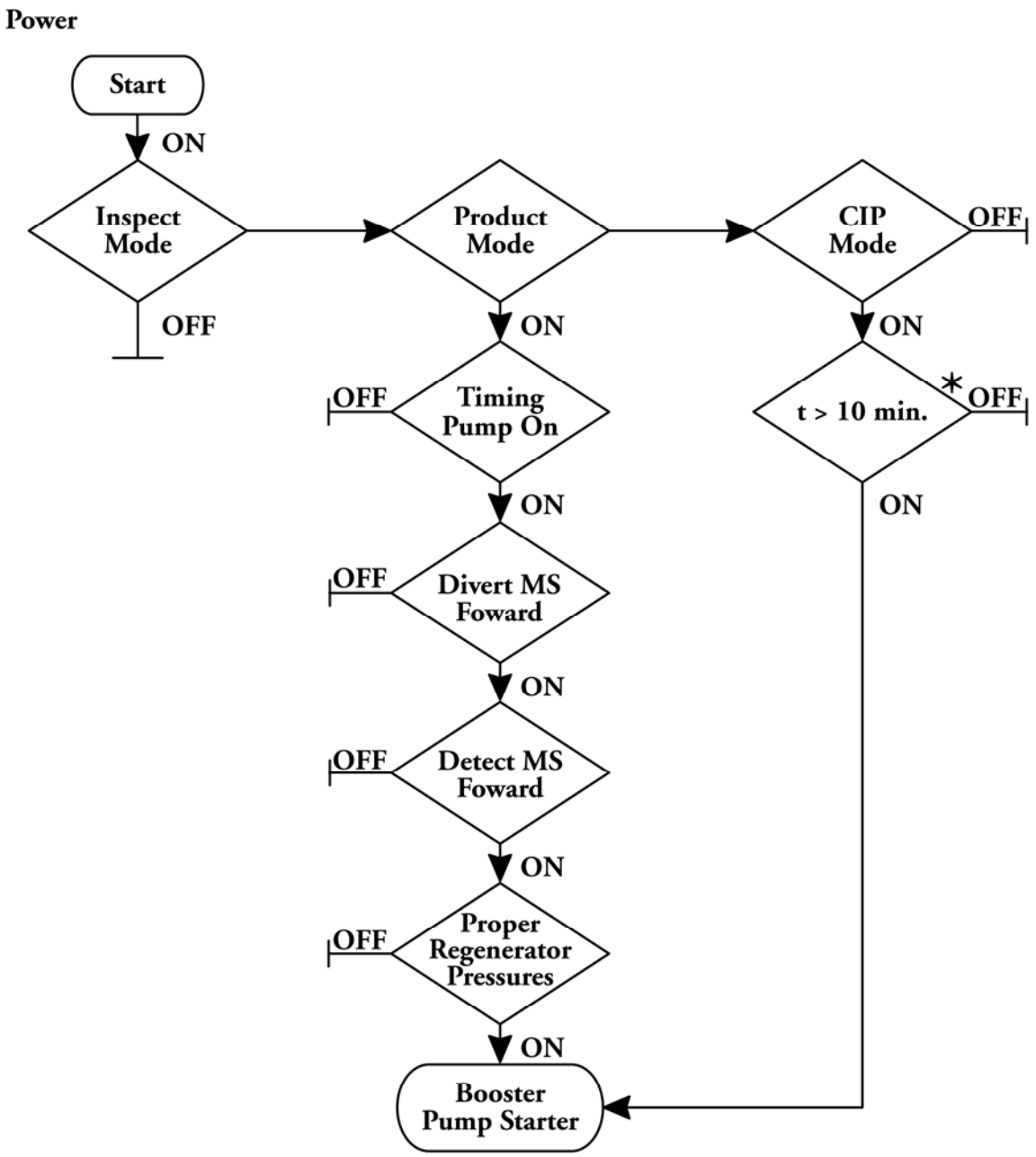

* This diamond (condition) is not necessary, if the 10 min. time relay is not used for a condition of these flow promoters to operate during CIP.

Figure 44. Logic Diagram: HTST Booster Pump

VI. CRITERIA FOR STEAM-BLOCK TYPE FDD SYSTEMS

1. Steam-Block Type FDD Systems shall have two (2) steam-block zones between the pasteurizer and the surge tank(s)/filler(s). There shall be a continuous visible bleed of steam or condensate to the drain from each steam-block zone.
2. The steam-block zones shall be temperature monitored and shall alarm when temperature falls below 121°C (250°F).
3. The Primary Divert Valve and other critical valves shall be position detectable and fail-safe and be alarmed to provide protection when needed.
4. The Steam-Block Type FDD System shall not move to the forward-flow position until all conditions required of the HHST pasteurizing system are met and shall divert under the same conditions as a standard FDD.
5. When the Steam-Block Type FDD System is in a divert condition, a loss of temperature alarm in a steam-block zone shall cause a full port opening to drain in that steam-block zone.
6. Should both steam-block zones fail when the Steam-Block Type FDD is in diverted flow, the resulting compromised milk or milk product shall not be distributed for sale.
7. Computer controls shall meet the requirements of this Appendix.

STEAM-BLOCK STYLE FDD SYSTEM – FUNCTIONAL DIAGRAM

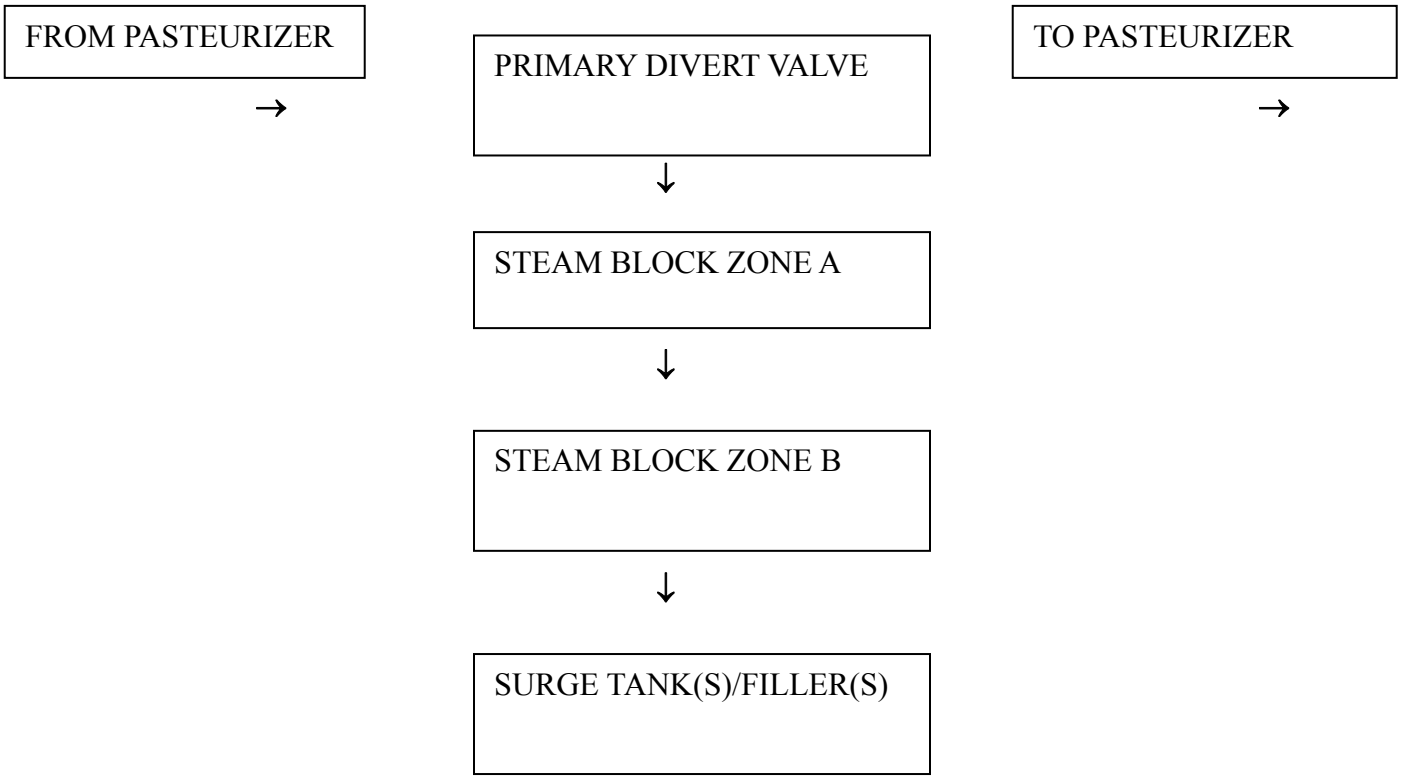

VII. MILK AND MILK PRODUCTS HACCP CCP MODELS FOR PASTEURIZATION EQUIPMENT

Milk plants regulated under the NCIMS HACCP Program, shall manage pasteurization under the HACCP Plan as a CCP. Following are examples of acceptable models (HACCP Plan Summary Tables) that may be used. Other HACCP Plan Summary Tables that appropriately manage pasteurization as a CCP may also be used.

MILK AND MILK PRODUCT CONTINUOUS-FLOW (HTST AND HHST) PASTEURIZATION---CCP MODEL HACCP PLAN SUMMARY

(Refer to the Example on page 247)

The essential elements of HTST and HHST pasteurization are:

1. Time;
2. Temperature; and
3. Pressure.

Each of these elements shall be addressed under the HACCP Plan:

a. In continuous-flow pasteurizers with sealed timing pumps, the minimum holding time at pasteurization temperature shall be addressed in the HACCP Plan as a CCP verification. Continuous-flow pasteurizers with magnetic flow meter based timing systems, timed at minimum pasteurization temperature, shall be addressed as a CL.

b. Temperature shall always be addressed in the HACCP Plan as a CL.

c. Pressures in the regenerator of continuous-flow pasteurizers, and in the case of HHST pasteurizers as required in the holding tubes, across steam injectors, and within infusion chambers shall be addressed in the HACCP Plan and managed as CCP verification(s).

MILK AND MILK PRODUCT VAT (BATCH) PASTEURIZATION---CCP MODEL HACCP PLAN SUMMARY

(Refer to the Example on page 248)

The essential elements of vat (batch) pasteurization are:

1. Time; and
2. Temperature.

Both of these elements shall be addressed under the HACCP Plan as a CL.

MILK AND MILK PRODUCT CONTINUOUS-FLOW (HTST AND HHST) PASTEURIZATION---
CCP Model HACCP Plan Summary

Critical Control Point (CCP)	**Hazard(s)**	**Critical Limits**	**Monitoring**				**Corrective Action(s)***	**CCP Verification** and ***	**Records**
			What	**How**	**Frequency**	**Who**			
Milk and Milk Products Pasteurization (HTST and HHST)	Biological-Vegetative Pathogens (non-spore formers)	Time and Temperature NOTE: Assuring that the minimum holding times are met in systems which use a sealed timing pump would be as CCP verification during required equipment calibration.	Temperature at the exit of the holding tube Residence time in the holding tube in continuous-flow pasteur-izers with magnetic flow meter based timing systems.	Temp. Recorder Chart Flow Recorder Chart	Continuous during Operation Continuous during Operation	Pasteurizer Operator Pasteurizer Operator	Manually divert flow of product Isolate the affected product Evaluate and determine disposition of the product (reprocess or disposal) Document actions	**Record Review:** Pasteurizer charts verified **Equipment Function Checks:** Operator performs required daily tests and record on the temperature charts. Authorized plant person (supervised by regulatory when required) conducts checks listed in the *Milk Plant Equipment Test Report* (FDA Form 2359b). **Seals:** Verify required regulatory seals daily	**Pasteurizer Charts** **Corrective Action Records** **CCP Verification - Records, including equipment testing records**

* A properly operating HTST or HHST pasteurization system will divert raw product to the constant-level tank when predetermined set points are not met.
**Every particle of milk or milk is heated, in a properly designed, calibrated and operated pasteurizer, to one of the temperature and time combinations specified in the current *Grade "A" PMO*.
*** Pressures in the regenerator of continuous-flow pasteurizers, and in the case of HHST pasteurizers as required in the holding tubes, across steam injectors, and within infusion chambers shall be addressed in the HACCP Plan and managed as CCP verification(s).

Product Description: _____ Method of Storage and Distribution: _____
Intended Use and Consumer: _____
Signature: _____ Date: _____

MILK AND MILK PRODUCT VAT (BATCH) PASTEURIZATION---CCP MODEL HACCP PLAN SUMMARY

Critical Control Point (CCP)	**Hazard(s)**	**Critical Limits**	**Monitoring**				**Corrective Action(s)**	**CCP Verification***	**Records**
			What	**How**	**Frequency**	**Who**			
Milk and Milk Products Pasteurization (Vat)	Biological-Vegetative Pathogens (non-spore formers)	Time and Temperature	Time and temperatures (in a vat that is continuously agitated to assure that there is no more than 1°F (0.5°C) difference between the warmest and the coldest product in the vat during processing) including minimum required time, product temperature and air space temperatures.	Temp. Recorder Chart	Continuous during Operation	Pasteurizer Operator	**During Pasteurization:** Continue pasteurization until the time/ temperature criteria have been met. If the time/ temperature criteria cannot be met in two (2) hours, an evaluation needs to be made as to the disposition of the product. **After Pasteurization (i.e., during the record review):** If the product is found not to have met the critical time/temperature, place all affected finished product on hold, and evaluate to determine product distribution, i.e., reprocess or destroy.	**Record Review:** Pasteurizer charts verified **Equipment Function Checks:** Operator performs required observation of indicating and airspace thermometers for each batch (air space checked at both the beginning and the end of the holding time) and recorded on the chart. Authorized plant person (supervised by regulatory when required) conducts checks listed in the *Milk Plant Equipment Test Report* (FDA Form 2359b). **Seals:** Verify required regulatory seals daily if applicable	**Pasteurizer Charts** **Corrective Action Records** **CCP Verification Records, including equipment testing records**

*Every particle of milk or milk product is heated, in a properly designed, calibrated and operated pasteurizer, to one of the temperature and time combinations specified in the current *Grade "A" PMO*.

Product Description: _____ Method of Storage and Distribution: _____

Intended Use and Consumer: _____

Signature: _____ Date: _____

APPENDIX I. PASTEURIZATION EQUIPMENT AND CONTROLS - TESTS

I. TESTING APPARATUS SPECIFICATIONS

TEST THERMOMETER

Type:
1. **Mercury or Non-toxic Liquid-in-Glass-Actuated:** Readily cleanable; plain front; enameled back; length at least 30.5 centimeters (12 inches); immersion point to be etched on stem and mercury or non-toxic liquid to stand in contraction chamber at 0ºC (32ºF). Non-toxic liquid-in-glass-actuated thermometers must have accuracy and reliability equivalent to mercury thermometers.
Scale Range: At least 7ºC (12ºF) below and 7ºC (12ºF) above the pasteurization temperature at which the operating thermometer is used, with extensions of the scale on either side permitted and protected against damage at 149ºC (300ºF).
Temperature Represented by Smallest Scale Division: 0.1ºC (0.2ºF).
Number of Degrees per 25 Millimeters (1 inch) of Scale: Not more than four (4) Celsius degrees or not more than six (6) Fahrenheit degrees.
Accuracy: Within ± 0.1ºC (± 0.2ºF), throughout specified scale range. The accuracy shall be checked against a thermometer, which has been tested by the National Institute of Standards and Technology (NIST).
Bulb: Corning normal or equally suitable thermometric glass.
Case: Suitable to provide protection during transit and periods when not in use.

2. **Digital Test Thermometer:** Hand-held; high accuracy digital thermometer; and battery or AC line powered. Calibration is protected from unauthorized changes.
Range: -18ºC to 149°C (0ºF to 300°F); Temperature represented by smallest scale division, 0.01°C or ºF and digital display.
Accuracy: System accuracy of: ± 0.056°C (± 0.100°F); Probe accuracy of: ± 0.05°C (± 0.09°F); Repeatability of ± 0.005°C (± 0.009°F); Three (3) month stability: ± 0.025°C (± 0.045°F). Thermometer accuracy from 0ºC to 150°C (32ºF to 302°F): ± 0.05°C (± 0.09°F). Calibration uncertainty: ± 0.0047°C (± 0.00846°F). The accuracy shall be checked against a thermometer, which has been tested by NIST. A certificate of calibration shall be maintained with the unit.
Self-Diagnostic Circuitry: Circuitry shall provide constant monitoring of all sensing, input and conditioning circuits. The diagnostic circuitry should be capable of identifying the probe and its calibration information. Without a correct connection of the probe, the display shall alert the operator and no temperature will be displayed.
Electromagnetic Compatibility: Shall be documented for these devices for their intended use and available to the Regulatory Agency. Units to be used in the "field" shall have been tested for heavy industrial standards, as specified in the European Electromagnetic Compatibility Directive.
Immersion: Minimum immersion point shall be marked on the probe. During control tests, the probes shall be immersed to equal depths in a water or oil bath.
Case: Suitable to provide protection during transit and periods when not in use.

GENERAL PURPOSE THERMOMETER

Type: Pocket type.
Scale Range: 1ºC (30ºF) to 100ºC (212ºF), with extensions of the scale on either side permitted. Protected against damage at 105ºC (220ºF).
Temperature Represented by Smallest Scale Division: 1ºC (2ºF).
Accuracy: Within ± 1ºC (± 2ºF), throughout the specified scale range. Checked periodically against a known accurate thermometer.
In the case of mercury actuated general-purpose thermometers, the following additional specifications shall apply:
Magnification of Mercury Column: To apparent width of not less than 1.6 millimeter (0.0625 inch).
Number of Degrees per Inch of Scale: Not more than twenty-nine (29) Celsius degrees or not more than fifty-two (52) Fahrenheit degrees.
Case: Metal, provided with a fountain pen clip.
Bulb: Corning normal or equally suitable thermometric glass.

ELECTRICAL CONDUCTIVITY MEASURING DEVICES

Type: Manual or automatic.
Conductivity: Capable of detecting change produced by the addition of ten (10) ppm of sodium chloride, in water of 100 ppm of hardness.
Electrodes: Standard.
Automatic Instruments: Electric clock, time divisions not over 0.2 of a second.

STOPWATCH

Type: Open face, indicating fractional seconds.
Accuracy: Accurate to 0.2 of a second.
Hands: Sweep hand, if applicable, one complete turn every sixty (60) seconds or less.
Scale: Divisions of not over 0.2 of a second.
Crown: Depression of crown or push button starts, stops and resets to zero.

II. TEST PROCEDURES

Equipment and field tests to be performed by the Regulatory Agency are listed and suitably referenced below. The results of tests shall be recorded on suitable forms and filed, as the Regulatory Agency shall direct. (Refer to Appendix M.)

TEST 1.

INDICATING THERMOMETERS - TEMPERATURE ACCURACY

Reference: Item 16p (A), (B), (C) and (E)
Application: To all indicating thermometers used for the measurement of milk or milk product temperature during pasteurization or aseptic processing, including airspace thermometers.

Frequency: Upon installation; at least once each three (3) months thereafter; whenever the thermometer has been replaced or the regulatory seal on a digital sensor or a digital control box has been broken.
Criteria: Within ± 0.25ºC (± 0.5ºF) for pasteurization and aseptic processing thermometers and ± 0.5ºC (± 1ºF) for airspace thermometers, in a specified scale range. Provided, that on batch pasteurizers used solely for thirty (30) minute pasteurization of milk or milk products at temperatures above 71°C (160°F), indicating thermometers shall be accurate to within ± 0.5°C (± 1°F).
Apparatus:
1. Test thermometer meeting the specifications cited in Part I of this Appendix;
2. Water, oil or other suitable media bath and agitator; and
3. Suitable means of heating the media bath.

Method: Both thermometers exposed to water, oil or other suitable media of uniform temperature. Indicating thermometer reading is compared to the reading of the test thermometer.
Procedure:
1. Prepare a quantity of water, oil or other suitable media in a bath, by raising the temperature of the media to within 2ºC (3ºF) of the appropriate pasteurization, or airspace temperature, or aseptic processing temperature.
2. Stabilize the bath temperature and agitate rapidly.
3. Continue agitation and insert indicating and test thermometers to indicated immersion point.
4. Compare both thermometer readings at the temperature within the test range.
5. Repeat the comparison of readings.
6. Record the thermometer readings, and the thermometer identification or location.
7. Install seals as appropriate on sensors and control boxes of digital thermometers.

Corrective Action: Do not run the test if the mercury column has been split or capillary tube is broken. The thermometer should be returned to the factory for repair. When the indicating thermometer differs from the test thermometer by more than 0.25ºC (0.5ºF) and the airspace thermometer by more than 0.5ºC (1ºF), the indicating thermometer should be adjusted to agree with the test thermometer. Retest the thermometer after adjustment.

TEST 2.

RECORDING THERMOMETERS - TEMPERATURE ACCURACY

Reference: Item 16p (A), (B), (C) and (E)
Application: To all recording and recorder-controller thermometers controllers used to record milk or milk product temperatures during pasteurization or aseptic processing.
Frequency: Upon installation; at least once each three (3) months thereafter; whenever the recording pen-arm setting requires frequent adjustment; when the sensing element has been replaced; or when a regulatory seal has been broken.
Criteria: Within ± 0.5ºC (± 1ºF), in specified scale range. Provided, that on batch pasteurizers used solely for thirty (30) minute pasteurization of milk or milk products at temperatures above 71°C (160°F), the recording thermometers shall be accurate to within ± 1°C (± 2° F), between 71°C (160° F) and 77°C (170°F).
Apparatus:
1. The indicating thermometer previously tested against a known accurate thermometer;

2. Water, oil or other suitable media bath and agitator;
3. Suitable means of heating the media bath; and
4. Ice.

NOTE: When this Test is performed on recorder-controllers used with HHST pasteurization or aseptic processing systems that operate at or above the boiling point of water, an oil or other suitable media bath shall be substituted for the processing (operating) temperature water mentioned in **Procedures** 1, 4, 5, 6, and 7 as well as the boiling water mentioned in **Procedures** 2, 3 and 5. The temperature of the oil bath that is used in place of the boiling water shall be above the normal operating range but below the highest temperature division on the chart.

Method: The testing of a recording thermometer for temperature accuracy involves the determination of whether or not the temperature pen-arm will return to within 0.5ºC (1ºF), or 1°C (2°F) as provided in the **Criteria** above, of its previous setting, after exposure to high heat and melting ice.

Procedure:

1. Adjust the recording pen to read exactly as the previously tested indicating thermometer, in the temperature range for the process being used, after a stabilization period of five (5) minutes, two (2) minutes for electronic recording thermometers, at a constant temperature. The bath shall be rapidly agitated throughout the stabilization period.
2. Prepare a second media bath by heating to the boiling point, or in the case of HHST or aseptic systems, to a temperature above the normal operating range but below the highest temperature division on the chart, and maintain temperature. Prepare a third container with melting ice. Place all media baths within working distance of the temperature-sensing element(s).
3. Immerse the recording thermometer sensing element into the boiling water, or in the case of HHST or aseptic processing systems into the media bath described above, for not less than five (5) minutes, two (2) minutes for electronic recording thermometers.
4. Remove the recording thermometer sensing element from the boiling water or other media bath and immerse it in the media bath at a temperature within the temperature range for the process being used. Allow a five (5) minute, two (2) minutes for electronic recording thermometers, stabilization period for both indicating and recording thermometers. Compare readings of the indicating and recording thermometers. The recording thermometer reading should be within ± 0.5ºC (± 1ºF) or ± 1°C (± 2°F) as provided above, of the indicating thermometer reading.
5. Remove the recording thermometer sensing element from the bath in the temperature range for the process being used, and immerse in melting ice for not less than five (5) minutes, two (2) minutes for electronic recording thermometers.
6. Remove the recording thermometer-sensing element from the ice water and immerse in a bath at a temperature, range for the process being used. Allow a five (5) minute, two (2) minutes for electronic recording thermometers, stabilization period for both indicating and recording thermometers. Compare readings of the indicating and recording thermometers. The recording thermometer reading should be within ± 0.5ºC (± 1ºF), or ± 1°C (± 2°F) as provided above, of the indicating thermometer reading.
7. Re-seal the regulatory controls as necessary and record the indicating and recording thermometer readings obtained from **Procedures** 1, 4, and 6.

Corrective Action: If the recording thermometer pen does not return to ± 0.5ºC (± 1ºF), or ± 1°C (± 2ºF) as provided above, of indicating thermometer reading at **Procedures** 4 and 6, the recording thermometer shall be repaired or replaced as necessary.

TEST 3.

RECORDING THERMOMETERS - TIME ACCURACY

Reference: Item 16p (A), (B), (C) and (E)
Application: To all recording and recorder-controller thermometers used to record the time of pasteurization or aseptic processing, including those used to record flow rates in magnetic flow meter based timing systems.
Frequency: Upon installation; at least once each three (3) months thereafter; or whenever the seal of a programmable recorder-controller has been broken.
Criteria: The recorded time of pasteurization or aseptic processing shall not exceed the true elapsed time.
Apparatus:
1. A watch, graduated at intervals not to exceed one (1) minute, and accurate to within five (5) minutes in twenty-four (24) hours; and
2. A pair of dividers or any other suitable device for measuring short distances.

Method: Comparison of the recorded time over a period of not less than thirty (30) minutes with a watch of known accuracy. For recorders utilizing electric clocks, check the cycle on the faceplate of the clock with a known cycle and observe that the clock is in operating condition.
Procedure:
1. Determine if the chart is appropriate for the recording thermometer. Insure that the recording pen is aligned with the time arc of the chart at both the center and the outside edge.
2. Inscribe a reference mark at the pen point on the recording chart and record the time.
3. At the end of thirty (30) minutes by the watch, inscribe a second reference mark at the pen point position on the chart.
4. Determine the distance between the two (2) reference marks and compare the distance with the time-scale divisions on the recording chart at the same temperature.
5. For electric clocks, remove the faceplate and compare the cycle specification on the faceplate with the current cycle utilized.
6. Re-seal the regulatory controls as necessary; enter the findings on the chart and initial and record the results.

Corrective Action: If recorded time is incorrect, the clock should be adjusted or repaired.

TEST 4.

RECORDING THERMOMETERS - CHECK AGAINST INDICATING THERMOMETERS

Reference: Item 16p (A), (B), (C) and (E)
Application: To all recording and recorder-controller thermometers used to record milk or milk product temperatures during pasteurization or aseptic processing.

Frequency: Upon installation and at least once each three (3) months by the Regulatory Agency, or HACCP qualified industry person, acceptable to the Regulatory Agency, qualified under Item 16p(E)2; and daily by the milk plant operator.
Criteria: The recording thermometer and recorder-controller thermometer shall not read higher than the indicating thermometer.
Apparatus: No supplementary materials required.
Method: This test requires only that the reading of the recording thermometer or the recorder-controller thermometer be compared with the indicating thermometer at a time when both are exposed to milk or milk product at a stabilized pasteurization or aseptic processing temperature.
Procedure:
1. While the indicating and recording temperatures are stabilized at or above the minimum legal pasteurization or aseptic processing temperature, read the indicating thermometer.
2. Immediately record and identify on the recording thermometer chart, the observed indicating thermometer temperature reading and the time at which this comparison was made. This may be accomplished by inscribing a line intersecting the recorded temperature arc at the pen location or other methods acceptable to the Regulatory Agency.

NOTE: This test shall be performed while the pasteurization operating temperatures are within the accurate range for the specific thermometers and charts used.

Corrective Action: If the recording thermometer or recorder-controller thermometer reads higher than the indicating thermometer, the pen or temperature adjusting mechanism shall be adjusted by the operator.

TEST 5.

FDD - PROPER ASSEMBLY AND FUNCTION

Reference: Item 16p (B), (C) and (E)
Application: Test 5 (parts 1 through 9) does not apply to aseptic processing divert systems, valves or other acceptable controls which may be used in place of a FDD. Parts 1 to 4 and 6 to 8 apply to all FDDs used with continuous-flow pasteurizers. Parts 5 and 9 apply only to FDDs used with HTST pasteurizers.
Frequency: Upon installation; at least once each three (3) months thereafter; or when a regulatory seal has been broken.
Criteria: The FDD shall function correctly in operating situations and shall de-energize the timing pump and all other flow-promoting devices capable of causing flow through the FDD, in the event of malfunction or incorrect assembly.

5.1 LEAKAGE PAST VALVE SEAT(S)

Apparatus: Suitable tools for the disassembly of the FDD and the sanitary piping.
Method: Observe the valve seat(s) of the FDD for leakage.
Procedure:
1. With the system operating on water, place the FDD in the diverted-flow position.

2. For single stem FDDs, disconnect the forward-flow piping and observe the valve seat for leakage. Check the leak escape ports to see if they are open.
3. For dual stem FDDs, observe the leak-detect line discharge or sight glass for leakage.
Corrective Action: If leakage is noted, the FDD must be dismantled and defective gaskets replaced or other suitable repairs made.

5.2 OPERATION OF VALVE STEM(S)

Apparatus: Suitable tools for tightening the packing nut on the stem(s)
Method: Observe the FDD valve stem(s) for ease of movement.
Procedure: When a stem-packing nut is used, tighten it as much as possible. Operate the system at maximum normal operating pressure and place the FDD in forward and diverted-flow several times. Note the freedom of action of the valve stem.
Corrective Action: If the valve action is sluggish, suitable adjustment or repair shall be made. The stem shall move freely in all positions, when the stem-packing nut is fully tightened.

5.3 DEVICE ASSEMBLY - SINGLE STEM DEVICE

Apparatus: Sanitary fitting wrench.
Method: When the FDD is improperly assembled and in diverted-flow (below cut-out temperature), observe the function of the timing pump and all other flow-promoting devices capable of causing flow through the FDD.
Procedure:
1. With the system in operation below the cut-in temperature, unscrew by one-half turn, the 13H hex nut that holds the top of the valve to the valve body. This should de-energize the timing pump and all other flow-promoting devices, which are capable of causing flow through the FDD. This test shall be conducted without piping connected to the forward-flow port of the FDD. (This allows movement of the top of the valve when the hex nut is loosened.) Re-tighten the 13H hex nut.
2. With the system in operation below the cut-in temperature, remove the connecting key, located at the base of the valve stem. The timing pump and all other flow-promoting devices, which are capable of causing flow through the FDD should be de-energized.
3. Attempt to restart the timing pump and each flow-promoting device capable of causing flow through the FDD. None of these flow-promoting devices should start or operate.
Corrective Action: If any flow-promoting device fails to respond as indicated, immediate checks of the device assembly and wiring are required to locate and correct the cause.

5.4 DEVICE ASSEMBLY - DUAL STEM DEVICE

NOTE: The test procedure presented in this Section is typical of tests accepted by FDA for various specific types of FDDs. Testing details, which may vary, are provided in individual FDD operator's manuals that have been reviewed by FDA and are specified by part number in FDA's Coded Memoranda (M-b's). In each of these FDA accepted test methods, if the words "metering pump" or "timing pump" are used they shall be understood to mean "timing pump and all other flow-promoting devices, which are capable of causing flow through the FDD".

Apparatus: None
Method: Observe the function of the timing pump and all other flow-promoting devices, which are capable of causing flow through the FDD when the FDD is improperly assembled.
Procedure:
1. With the FDD in diverted-flow, caused by temperature, and the FDD properly assembled, move the FDD to the forward-flow position and disconnect the stem from the actuator.
2. Move the FDD to the diverted-flow position and turn on the timing pump and all other flow-promoting devices, which are capable of causing flow through the FDD. The timing pump and all other flow-promoting devices must be de-energized and must not run. If any pump starts momentarily and then stops, it may indicate the improper wiring of the one (1) second time delay as allowed in 16p(B)2.b.(10). Separators must be effectively valved-out of the system.
3. Reassemble the FDD by moving it to the forward-flow position and reconnecting the stem to the actuator.
4. Repeat the procedure for the other actuator.
Corrective Action: If any of the flow-promoting devices fail to respond as indicated, an immediate check of the FDD assembly and wiring is required to locate and correct the cause.

5.5 MANUAL DIVERSION

(Booster pump installed in the HTST system)

Apparatus: None
Method: Observe the response of the system to manual diversion.
Procedure:
1. With the HTST system in operation and the FDD in the forward-flow position, press the manual diversion button. This should:
   a. Cause the FDD to assume the divert position;
   b. De-energize the booster pump; and
   c. The pressure differential between raw and pasteurized milk or milk product in the regenerator should be maintained.
2. Operate the HTST system in forward-flow and activate the manual divert button until the raw pressure reaches zero (0) psi. Deactivate the manual divert button and observe the raw milk or milk product and pasteurized milk or milk product pressures. The pressure differential between raw and pasteurized milk or milk product in the regenerator should be maintained.
3. Re-seal the regulatory controls as necessary.
Corrective Action: If the above described actions do not occur, or the necessary pressure differential between raw and pasteurized milk or milk product is not maintained, the assembly and wiring of the HTST system must be immediately reviewed and the indicated deficiencies corrected or proper adjustments made.

5.6 RESPONSE TIME

Apparatus:
1. Water, oil or other suitable media bath;
2. Suitable means of heating the media bath; and
3. Stopwatch.

Method: Determine the elapsed time between the instant of the activation of the control mechanism at cut-out temperature on declining temperature and the instant the FDD takes the fully diverted-flow position.
Procedure:
1. With the water, oil or suitable media bath at a temperature above cut-out temperature, allow the water, oil or other suitable media to cool gradually. The moment the cut-out mechanism is activated, start the watch. The moment the FDD takes the fully-diverted position, stop the watch.
2. Re-seal the regulatory controls as necessary and record the results.
Corrective Action: If the response time exceeds one (1) second, immediate corrective action must be taken.

5.7 TIME DELAY INTERLOCK WITH TIMING PUMP

Application: To all dual stem FDDs with a manual forward-flow switch.
Apparatus: None
Method: Determine that the device does not assume a manually induced forward-flow position, while the timing pump or any other flow-promoting device, which is capable of causing flow through the FDD is operating.
Procedure: With the system operating in forward-flow, move the control switch to the "Inspect" position and observe that the following events automatically occur in sequence:
1. The FDD immediately moves to the diverted-flow position and the timing pump and all other flow-promoting devices, which are capable of causing flow through the FDD, are de-energized, or in the case of separators, are effectively valved-out of the system
2. The FDD remains in the diverted-flow position while the timing pump and all other flow-promoting devices, which are capable of causing flow through the FDD are running down or in the case of a separator, valving out.
3. The FDD may assume the forward-flow position only after the timing pump stops turning, and all other flow-promoting devices, which are capable of causing flow through the FDD have also stopped, or in the case of separators, have been effectively valved-out of the system.
4. Repeat the above procedure by moving the control switch to the “Cleaned-in-Place” (CIP) position.
5. Record the Test results and seal the control enclosure.
Corrective Action: If the above sequence of events do not occur, either a timer adjustment or wiring change is required.

5.8 CIP TIME DELAY RELAY

Application: To all continuous-flow pasteurizer systems in which it is desired to run the timing pump and/or other flow-promoting devices during the CIP cycle without the controls required during product processing.
Criteria: When the mode switch on the FDD is moved from “Process” to “CIP”, the FDD shall move immediately to the diverted position. It shall remain in the diverted position for at least ten (10) minutes, with all public health controls required in “Process” mode functioning, before starting its normal cycling in the “CIP” mode. In HTST systems, the booster pump shall be de-energized during the ten (10) minute time delay.
Apparatus: Stopwatch.

Method: Determine that the set point on the time delay relay is equal to or greater than ten (10) minutes.

Procedure:

1. Operate the pasteurizer in forward-flow, with the mode switch on the FDD in the "Process" position, using water above pasteurization temperature. For magnetic flow meter based timing systems, operate the system, at a flow-rate below the Flow-Alarm set point and above the Loss-of-Signal-Alarm set point.

NOTE: The appropriate temperature elements may be placed in a water or oil bath to simulate the normal pasteurization temperature of the holding tube as an alternative to heating the water in the system above the pasteurization temperature.

2. Move the mode switch on the FDD to the "CIP" position. The FDD should move immediately to the diverted position. Start the stopwatch when the FDD moves to the diverted position. Check all controls that are required to be in operation when the system is in the "Process" mode and in diverted-flow. For example, in HTST systems, the booster pump must stop running. Separators located between regenerator sections or on the pasteurized side of the system must be effectively valved-out and stuffer pumps for such separators must be de-energized.
3. Stop the stopwatch when the CIP timer times out. On most systems this is when the FDD moves to the forward position for its initial cycle in the "CIP" mode. At this time the system may be operated without the controls normally required during product processing. For example, the booster pump may start at this time.
4. Record the results.
5. Install and seal the enclosure over the time delay relay.

Corrective Action: If the FDD does not remain in the diverted position for at least ten (10) minutes after the mode switch is moved from "Process" to "CIP", increase the set point on the time delay relay and repeat this test procedure. All public health controls required when the system is in "Process" mode and in diverted-flow must be functional during these ten (10) minutes. If any of the public health controls are not functional during these ten (10) minutes, adjustments or repairs are needed. In HTST systems, if the booster pump runs at any time during the ten (10) minute delay, the booster pump wiring is in need of repair.

5.9 LEAK-DETECT VALVE FLUSH - TIME DELAY

Application: The minimum one (1) second delay applies to HTST continuous-flow pasteurizers in which space between the divert and leak-detect valve is not self-draining in the diverted-flow position.

The maximum of five (5) seconds for this delay is not applicable if:

1. The minimum acceptable holding time in diverted-flow can be achieved without the use of a restriction in the divert line; or
2. The timing system is magnetic flow meter based.

Criteria: The leak-detect valve will be flushed for at least one (1) second and not more that five (5) seconds after the divert valve moves to the forward-flow position and before the leak-detect valve moves to the forward position.

Apparatus: Stop watch

Method: Observe the movement of the divert and leak-detect valves to the forward-flow position and measure the time interval between the movement of the two (2) valves.
Procedure:
1. Move the FDD from the diverted-flow position to the forward-flow position either by:
   a. Raising the temperature above the cut-in set point; or
   b. Operating the HTST pasteurizer above the cut-in temperature in manual divert mode and then releasing the manual divert.
2. When the divert valve begins to move to the forward-flow position, start the watch.
3. When the detect valve begins to move to the forward-flow position, stop the watch.
4. Record the elapsed time.
5. If the elapsed time is at or above one (1) second and at or below five (5) seconds, seal the time delay.

Corrective Action: If the elapsed time is less than one (1) second or greater than five (5) seconds, appropriate changes to the system or system controls must be made.

TEST 6.

LEAK-PROTECTOR VALVE

Reference: Item 16p (A) and (E)
Application: To all batch (vat) pasteurizer outlet valves and to all batch (vat) pasteurizer inlet valves, which are not disconnected and removed during holding, cooling and emptying periods.
Frequency: Upon installation; and at least once each three (3) months thereafter.
Criteria: No leakage of milk or milk product past the valve seat in any closed position.
Apparatus: No supplementary materials required.
Method: By observing when the piping is disconnected from the valve outlet whether or not leakage past the valve seat occurs when pressure is exerted against the upstream face of the valve.
Procedure:
1. During normal operation, while milk or milk product pressure is exerted against the valve inlet, fully close the valve and disconnect the outlet piping.

NOTE: Care must be taken to avoid contamination of the valves or the piping.

2. Observe whether or not any milk or milk product is leaking past the valve seat into the valve outlet.
3. In the case of plug-type valves, turn the valve to the just-closed position, and examine the leakage into the valve outlet.
4. Reconnect the outlet piping.
5. Record the identity of the valve and findings for the office record.

Corrective Action: If leakage past the valve seat should occur in any closed position, the valve plug should be re-ground, gaskets replaced, or any other necessary steps shall be taken to prevent leakage.

TEST 7.

INDICATING THERMOMETERS ON PIPELINES - THERMOMETRIC RESPONSE

Reference: Item 16p (B) and (E)
Application: To all continuous-flow pasteurizers, except those in which the FDD is located downstream of the regenerator and/or cooler section.
Frequency: Upon installation; once each three (3) months thereafter; and whenever the seal on a digital thermometer has been broken.
Criteria: Four (4) seconds under specified conditions.
Apparatus:
1. Stopwatch;
2. The indicating thermometer previously tested against a known accurate thermometer;
3. Water bath and agitator; and
4. Suitable means of heating the water bath.

Method: By measuring the time required for the reading of the thermometer being tested to increase 7ºC (12ºF) through a specified temperature range. This range must include the pasteurization temperature. The temperature used in the water bath will depend upon the scale range of the thermometer to be tested.
Procedure:
1. Immerse the indicating thermometer in the water bath, heated to a temperature at least 11ºC (19ºF) higher than the minimum scale reading on the indicating thermometer. The bath temperature should be 4ºC (7ºF) higher than the maximum required pasteurization temperature for which the thermometer is used.
2. Immerse the indicating thermometer in a bucket of cold water for several seconds to cool it.

NOTE: Continuous agitation of the water baths during the performance of **Procedures** 3, 4 and 5 is required. The elapsed time between the end of **Procedure** 1 and the beginning of **Procedure** 3 should not exceed fifteen (15) seconds, unless a constant temperature bath is used to prevent the hot water bath from cooling significantly.

3. Insert the indicating thermometer into a hot water bath to the proper bulb immersion depth.
4. Start the stopwatch when the indicating thermometer reads 11ºC (19ºF) below the bath temperature.
5. Stop the stopwatch when the indicating thermometer reads 4ºC (7ºF) below the bath temperature.
6. Record the thermometric response time for the office record.

For Example: For a thermometer used at pasteurization temperature set points of 71.7ºC (161ºF) and 74.4ºC (166ºF), a water bath at a temperature of 78.3ºC (173ºF) could be used. 10.6ºC (19ºF) lower than a 78.3ºC (173ºF) water bath would be 67.8ºC (154ºF); 3.9ºC (7ºF) lower than a 78.3ºC (173ºF) water bath would be 74.4ºC (166ºF). Hence, after immersing the thermometer that has been previously cooled, in the 78.3ºC (173ºF) bath, the stopwatch is started when the thermometer reads 67.8ºC (154ºF) and stopped when it reads 74.3ºC (166ºF).

NOTE: The test included the pasteurization temperature set points of 71.7ºC (161ºF) and 74.4ºC (166ºF). If the pasteurization temperature set points had been 71.7ºC (161ºF) and 79.4ºC (175ºF), it would not have been possible to include both set points within a 6.7ºC (12ºF) span. With these set points the test would have to be done separately for each set point.

Corrective Action: If the response time exceeds four (4) seconds, the thermometer should be replaced or returned for repair.

TEST 8.

RECORDER/CONTROLLER - THERMOMETRIC RESPONSE

Reference: Item 16p.(B and E)
Application: To all continuous-flow pasteurizers, except those in which the FDD is located at the end of the cooler section.
Frequency: Upon installation and at least once each three (3) months thereafter.
Criteria: Five (5) seconds, under specified conditions.
Apparatus:
1. Stopwatch;
2. The indicating thermometer previously tested against a known accurate thermometer;
3. Water bath and agitator; and
4. Suitable means of heating the water bath.

Method: Measure the time interval between the instant when the recording thermometer reads 7ºC (12ºF) below the cut-in temperature and the moment of cut-in by the recorder/controller. This measurement is made when the sensing element is immersed in a rapidly agitated water bath maintained at 4ºC (7ºF) above the cut-in temperature.
Procedure:
1. Check and, if necessary, adjust the pen-arm setting of the recording thermometer in the proper reference to agree with the indicating thermometer reading at the pasteurization temperature.
2. Determine the cut-in temperature of the recorder/controller, either while in normal operation or by using a water bath. (Refer to Test 10)
3. Remove the sensing element and allow it to cool to room temperature.
4. Heat the water bath to 4ºC (7ºF) above the cut-in temperature, while vigorously agitating the bath to insure a uniform temperature.
5. Immerse the recorder/controller bulb in the bath. Continue agitation during **Procedures** 6 and 7 below.
6. Start the stopwatch when the recording thermometer reaches a temperature of 7ºC (12ºF) below the cut-in temperature.
7. Stop the stopwatch when the recorder/controller cuts in.
8. Re-seal the regulatory controls as necessary and record the thermometric response time for office record.

Corrective Action: If the response time exceeds five (5) seconds, the recorder/controller should be repaired.

TEST 9.

REGENERATOR PRESSURE CONTROLS

Reference: Item 16p (D) and (E)

9.1 PRESSURE SWITCHES

Used to control the operation of the booster pump.

Application: To all pressure switches controlling the operation of a booster pump on HTST pasteurizer systems employing regenerators.
Frequency: Upon installation; each three (3) months thereafter; after any change in the booster pump or the switch circuit; and/or whenever the pressure switch seal is broken.
Criteria: The booster pump shall not operate unless there is at least a 6.9 kPa (1 pound) pressure differential on the pasteurized milk or milk product side of the regenerator.
Apparatus: Sanitary pressure gauge and pneumatic testing device, for checking and adjusting pressure switch settings.
A simple pneumatic testing device may be made from a discarded 50 millimeters (2 inches)-7BX sanitary tee, with two (2) additional 13H nuts, one (1) of which is provided with a 16A cap, drilled and tapped for a 13 millimeters (½ inch) galvanized iron nipple for the air connection. A hose connection is made to a compressed air source in the milk plant by means of a snap-on fitting. The air pressure can be controlled by pressure-reducing valve (range 0-60 psi) followed by a 13 millimeters (½ inch) globe-type bleeder valve connected into the side outlet of a 13 millimeters (½ inch) tee installed between the pressure-reducing valve and the testing device. The pressure switch to be tested is disconnected from the pasteurizer and connected to another of the outlets of the sanitary tee, and the pressure gauge is connected to the third outlet of the sanitary tee. By careful manipulation of the air pressure reducing valve and the air bleeder valve, the air pressure in the testing device may be regulated slowly and precisely. In operating the device, care should be taken to avoid exposing the pressure switch and the sanitary pressure gauge to excessive pressure that may cause damage. This may be done by first closing off the air pressure regulating valve and opening fully the bleeder valve; these may then be manipulated slowly to bring the air pressure in the testing device within the desired range. A test light of proper voltage should be placed in-series with the pressure switch contact and in parallel with the electrical load, booster pump starter, so the actuation point may be readily determined.
Method: Check and make the adjustment of pressure switch to prevent the operation of the booster pump, unless the pressure of the pasteurized milk or milk product side of the regenerator is greater by at least 6.9 kPa (1 psi) than any pressure that may be generated on the raw side.
Procedure:

1. Determine the maximum pressure of the booster pump.
   a. Install the sanitary pressure gauge in a tee at the discharge of the booster pump;
   b. Operate the pasteurizer with water; with the FDD in forward-flow; the timing pump operating at the minimum speed possible; and the booster pump operating at its rated speed. If vacuum equipment is located between the raw outlet from the regenerator and the timing pump, it should be bypassed while this determination is made.
   c. Note the maximum pressure indicated by the pressure gauge under these conditions.

2. Check and set the pressure switch.
   a. Install a sanitary pressure gauge of known accuracy on the pneumatic testing device to which the pressure switch sensing-element should also be connected.
   b. Remove the seal and cover to expose the adjustment mechanism on the pressure switch.
   c. Operate the testing device and determine the pressure gauge reading at the cut-in point of the pressure switch which will light the test lamp. If the switch is short circuited, the lamp will be lighted before air pressure is applied.
   d. The cut-in point should be adjusted, if necessary, so as to occur at a pressure gauge reading at least 6.9 kPa (1 psi) greater than the maximum booster pump operating pressure, as determined under Section 1 of this procedure. Where adjustment is necessary, refer to the manufacturer's instructions for the adjusting procedures. After adjustment, recheck the actuation point and readjust if necessary.
   e. Replace the cover, seal the pressure switch and restore the sensing element to its original location.
   f. Record the maximum booster pump pressure developed and the pressure switch setting for the office record.

9.2 DIFFERENTIAL PRESSURE CONTROLLER

Application: Test 9.2.1 applies to all differential pressure controllers used to control the operation of booster pumps on HTST systems or used to control the operation of FDDs on HHST and HTST Pasteurization systems with the FDD located downstream of the pasteurized regenerator and/or final cooler and aseptic processing systems.
Test 9.2.2 applies only to HTST systems with the FDD located immediately following the holding tube.
Test 9.2.3 applies to the testing of continuous flow pasteurization systems in which the differential pressure controller is used to control the operation of the FDD. Test 9.2.3 also applies to aseptic processing systems in which the differential pressure controller is used to control the FDD, milk or milk product divert system, milk or milk product divert valve or other acceptable control system.
Frequency: Upon installation; each three (3) months thereafter; and whenever the differential pressure controller is adjusted or repaired.
Criteria: The booster pump shall not operate, or the pasteurizer shall not operate in forward-flow, unless the milk or milk product pressure in the pasteurized side of the regenerator is at least 6.9 kPa (1 psi) greater than the milk or milk product pressure in the raw side of the regenerator. When the differential pressure controller is used to control the FDD on HHST or aseptic processing systems, and improper pressure occurs in the regenerator, the FDD shall move to the diverted-flow position and remain in diverted-flow until the proper pressures are re-established in the regenerator and all milk or milk product-contact surfaces between the holding tube and FDD have been held at or above the required pasteurization or aseptic processing temperature, continuously and simultaneously for at least the required time.
Apparatus: A sanitary pressure gauge and a pneumatic testing device, described in **PRESSURE SWITCHES** can be used for checking and adjusting the differential pressure switch setting. (Refer to Test 9.1)
Method: The differential pressure switch is checked and adjusted to prevent the operation of the booster pump, or prevent forward-flow, unless the milk or milk product pressure in the

pasteurized, or aseptic, side of the regenerator is at least 6.9 kPa (1 psi) greater than the pressure in the raw side of the regenerator.

9.2.1 CALIBRATION OF THE DIFFERENTIAL PRESSURE CONTROLLER PROBES

Procedure:

1. Loosen the process connection at both pressure sensors and wait for any liquid to drain through the loose connections. Both pointers, or digital displays, should be within 3.5 kPa (0.5 psi) of 0 kPa (0 psi). If not, adjust the pointer(s), or the digital display(s), to read 0 kPa (0 psi).
2. Remove both sensors from the processor and mount them in a tee, either at the discharge of the booster pump, or connected to the pneumatic testing device. Note the separation between the two (2) pointers or digital displays. The change in elevations of the sensors will have caused some change in the zero readings. Turn on the booster pump switch and depress the test push button to operate the booster pump. If the pneumatic testing device is used in lieu of the booster pump, adjust the air pressure to the normal operating pressure of the booster pump. Note that the pointer, or digital display reading separation is within 6.9 kPa (1 psi) of that observed before the pressure was applied. If not, the instrument requires adjustment or repair.
3. Record the Test results for the office record.

9.2.2 HTST - INTERWIRING OF THE PRESSURE DIFFERENTIAL CONTROLLER WITH THE BOOSTER PUMP

Method: Determine if the booster pump stops when the pressure differential is not properly maintained in the regenerator.

Procedure:

1. Connect the pasteurized pressure sensor to a testing tee with the other end of the tee capped.

NOTE: If there is water in the HTST system, ensure that the recorder/controller probe and the pasteurized sensor ports are capped before the timing pump is turned on.

2. Turn on the timing pump and the booster pump.
3. Place the recorder/controller probe in hot water, which is above the cut-in temperature.
4. Turn up the air supply on the tee to provide an adequate pressure differential to start the booster pump.
5. Decrease the air supply to the testing tee until the pressure is less than 14 kPa (2 psi) of the pressure on the raw milk or milk product pressure sensor. The booster pump should have stopped. Ensure that the FDD remains in the forward-flow position and the timing pump continues to operate.
6. Reseal the regulatory controls as necessary and record the Test results for the office record.

Corrective Action: If the booster pump fails to stop when the pressure differential is not maintained, have the milk plant maintenance personnel determine and correct the cause.

9.2.3 INTERWIRING OF THE PRESSURE DIFFERENTIAL CONTROLLER WITH THE FDD IN AN HHST CONTINUOUS FLOW PASTEURIZATION SYSTEM; OR AN ACCEPTABLE ALTERNATIVE DEVICE, OR SYSTEM IN ASEPTIC PROCESSING EQUIPMENT

Application:
1. To all differential pressure controllers used to control the operation of FDDs on continuous flow pasteurization systems with the FDD located downstream of the regenerator and/or final cooler, and
2. To all differential pressure controllers used to control the operation of FDDs, milk or milk product divert systems, milk or milk product divert valve(s) or other acceptable control systems used in aseptic processing equipment.

Apparatus: A sanitary pressure gauge and a pneumatic testing device, described in **PRESSURE SWITCHES** can be used for checking and adjusting the differential pressure switch setting. (Refer to Test 9.1)

Method: The differential pressure switch is checked and adjusted to prevent forward-flow, unless the milk or milk product pressure in the pasteurized side of the regenerator is at least 6.9 kPa (1 psi) greater than the pressure in the raw milk or milk product side of the regenerator. In the case of milk or milk product-to-water-to-milk or milk product regenerators, protected on the pasteurized or aseptic side, the “water side” of the regenerator shall be considered to be the "raw product side" for purposes of this Test.

Procedure:
1. Wire the test lamp in series with the signal from the pressure differential switch to the FDD.
2. Calibrate the pressure switch and probes. (Use Test 9.2.1.)
3. Adjust the pressure on the pressure switch sensors to their normal operating pressures, with the pasteurized or aseptic pressure at least 14 kPa (2 psi) higher than the raw product pressure.
   a. The test lamp should be lit. If not, increase the pasteurized or aseptic pressure, or lower the raw product pressure, until the test light is lit.
   b. Gradually lower the pasteurized or aseptic side, or raise the raw product pressure until the test light turns off.
   c. The test light should turn off when the pasteurized or aseptic pressure is at least 14 kPa (2 psi) higher than the raw product pressure.
   d. Note the differential pressure at the point the light turns off.
   e. Gradually raise the pasteurized or aseptic pressure, or lower the raw product pressure, until the test light turns on.
   f. The test light should not turn on until the pasteurized or aseptic pressure is at least 14 kPa (2 psi) higher than the raw product pressure. Note the differential pressure at the point the light turns off.

NOTE: This test may be completed using a pneumatic testing device capable of producing differential pressures on the probes. This device should be capable of being operated, and be operated, in a manner so as to duplicate the conditions described above.

4. Seal the instrument and record the Test results for the office record.

9.3 ADDITIONAL HTST TESTS FOR BOOSTER PUMPS - INTERWIRING

Application: To all booster pumps used for HTST systems where the FDD is located immediately after the holding tube.
Criteria: The booster pump shall be wired so it cannot operate if the FDD is in the diverted position or if the timing pump is not in operation.
Apparatus:
1. A sanitary pressure gauge and pneumatic testing device as described in Test 9.1 Pressure Switches;
2. Water bath and agitator; and
3. Suitable means of heating the water bath.

9.3.1 BOOSTER PUMPS -INTERWIRED WITH FDD

Method: Determine if the booster pump stops by dropping the temperature and causing the FDD to divert.
Procedure:
1. Connect the pasteurized pressure sensor to a testing tee with the other end of the tee capped.

NOTE: If there is water in the HTST system, ensure that the recorder/controller probe and the pasteurized sensor ports are capped before the timing pump is turned on.

2. Turn on the timing pump and the booster pump.
3. Place the recorder/controller probe in hot water, which is above the cut-in temperature.
4. Turn up the air supply on the tee to provide an adequate pressure differential to start the booster pump.
5. Remove the recorder/controller probe from the hot water.
6. When the FDD moves to the diverted-flow position, the booster pump must stop. Ensure that the pressure differential remains adequate and the timing pump continues to operate.
7. Reseal the regulatory controls as necessary and record the Test results for the office records.

Corrective Action: If the booster pump fails to stop when the FDD is in the diverted-flow position, have the milk plant maintenance personnel check the wiring and correct the cause.

9.3.2 BOOSTER PUMPS - INTERWIRED WITH THE TIMING PUMP

Method: Determine if the booster pump stops when the timing pump is off.
Procedure:
1. Connect the pasteurized pressure sensor to a testing tee with the other end of the tee capped.

NOTE: If there is water in the HTST system, ensure that the recorder/controller probe and the pasteurized sensor ports are capped before the timing pump is turned on.

2. Turn on the timing pump and the booster pump.
3. Place the recorder/controller probe in hot water, which is above the cut-in temperature.
4. Turn up the air supply on the tee to provide an adequate pressure differential to start the booster pump. The booster pump should start running.

5. Turn off the timing pump. The booster pump must stop. Ensure that the pressure differential remains adequate and the FDD remains in the forward-flow position.
6. Reseal the regulatory controls as necessary and record the Test results for the office record.

Corrective Action: If the booster pump fails to stop when the timing pump has been turned off, have the milk plant maintenance personnel determine and correct the cause.

TEST 10.

MILK OR MILK PRODUCT-FLOW CONTROLS AND MILK OR MILK PRODUCT TEMPERATURE AT CUT-IN AND CUT-OUT

References: Item 16p (B), (C) and E)

Milk or milk product-flow controls shall be tested for milk or milk product temperature at cut-in and cut-out by one (1) of the following applicable tests at the frequency prescribed:

10.1 HTST PASTEURIZERS

Application: All recorder/controllers used in connection with HTST pasteurizers, except those in which the FDD is located at the end of the cooler section.

Frequency: Upon installation; at least once each three (3) months thereafter by the Regulatory Agency, or HACCP qualified industry person, acceptable to the Regulatory Agency, qualified under Item 16p(E)2; daily by the milk plant operator; or when a regulatory seal has been broken.

Criteria: No forward-flow until the pasteurization temperature has been reached. Flow diverted before the temperature drops below the minimum pasteurization temperature.

Apparatus: No supplemental materials needed.

Method: By observing the actual temperature of the indicating thermometer at the instant forward-flow starts (cut-in) and stops (cut-out).

Procedure:

1. Cut-in temperature:
   a. While milk, milk product or water is completely flooding the sensing element of the recorder/controller and the indicating thermometer, increase the heat gradually so as to raise the temperature of the milk, milk product or water at a rate not exceeding 0.5ºC (1ºF) every thirty (30) seconds. If a water bath is used in place of milk, milk product or water flowing through the system, the water bath shall be adequately agitated during this Test.
   b. Observe the indicating thermometer reading at the moment forward-flow starts, i.e., the FDD moves. Observe that the frequency pen reading is synchronized with the recording pen on the same reference arc.
   c. Record the indicating thermometer reading on the recording thermometer chart and initial. The Regulatory Agency shall record Test findings.
2. Cut-out temperature:
   a. After the cut-in temperature has been determined, and while the milk, milk product or water is above the cut-in temperature, allow the milk, milk product or water to cool slowly at a rate not exceeding 0.5ºC (1ºF) per thirty (30) seconds. Observe the indicating thermometer reading at the instant forward-flow stops.
   b. Re-seal the regulatory controls as necessary and record the indicating thermometer reading on the recording thermometer chart and initial.

Corrective Action: Should the reading be below the minimum pasteurization temperature, the cut-in and cut-out mechanism and/or the differential temperature mechanism should be adjusted to obtain proper cut-in and cut-out temperatures by repeated tests. When compliance is achieved, seal the recorder/controller mechanism.

10.2 PASTEURIZERS AND ASEPTIC PROCESSING SYSTEMS USING INDIRECT HEATING

Application: All HHST and HTST pasteurizers with the FDD located downstream of the regenerator and/or final cooler and aseptic processing systems using indirect heating. When testing aseptic processing systems, the "milk or milk product divert system", or “milk or milk product divert valve" or "acceptable control system" may be substituted for the “FDD" when it is referenced in this Test.

Frequency: Upon installation; every three (3) months thereafter; and whenever the thermal controller seal is broken.

Criteria: The pasteurizer or aseptic processor shall not operate in forward-flow unless the pasteurization or aseptic processing temperature has been achieved. The milk or milk product flow shall be diverted at a temperature lower than the chosen pasteurization or aseptic processing standard.

Apparatus: No supplemental materials needed.

Method: The cut-in and cut-out temperatures are determined by observing the actual temperature in the constant temperature bath at which the two (2) sensing elements signal forward-flow (cut-in) and diverted-flow (cut-out).

Procedure:

1. Wire the test lamp in series with the control contacts of the holding tube sensing element. Immerse this sensing element in the constant temperature bath. Raise the bath temperature at a rate not exceeding 0.5ºC (1ºF) every thirty (30) seconds. Observe the temperature reading at the cut-in temperature. Record the temperature for the office record.
2. After the cut-in temperature has been determined and while the bath is above the cut-in temperature, allow the bath to cool slowly at a rate not exceeding 0.5ºC (1ºF) per thirty (30) seconds. Observe the temperature reading on the thermal-limit-controller when the test lamp goes out, cut-out temperature. Determine that the cut-out temperature, on the thermal-limit-controller is equivalent to or greater than the chosen pasteurization or aseptic processing standard. Where adjustment is necessary, refer to the manufacturer's instructions. After adjustment, repeat the procedure above, and when the results are satisfactory, record the results for the office records.
3. Repeat the procedure for the FDD sensing element. When proper cut-out temperature has been verified for both sensing elements, seal the thermal-limit-controller system.

10.3 PASTEURIZERS AND ASEPTIC PROCESSING SYSTEMS USING DIRECT HEATING

Application: All HHST and HTST pasteurizers with the FDD located downstream of the regenerator and/or final cooler and aseptic processing systems using direct heating. When testing aseptic processing systems, the "milk or milk product divert system" or "milk or milk product

divert valve" or "acceptable control system" may be substituted for the "FDD" when it is referenced in this Test.
Frequency: Upon installation; every three (3) months thereafter; and whenever the thermal-limit-controller seal is broken.
Criteria: The pasteurizer or aseptic processor shall not operate in forward-flow unless the pasteurization or aseptic processing temperature has been achieved. The milk or milk product flow shall be diverted at a temperature lower than the chosen pasteurization or aseptic processing standard.
Apparatus: No supplemental materials needed.
Method: The cut-in and cut-out temperatures are determined by observing the actual temperature in the constant temperature bath at which each of the three (3) sensing elements signals forward-flow (cut-in) and diverted-flow (cut-out).
Procedure:
1. Wire the test lamp in series with the control contacts of the holding tube sensing element. Immerse this sensing element in the constant temperature bath. Raise the bath temperature at a rate not exceeding 0.5ºC (1ºF) every thirty (30) seconds. Observe the temperature reading on the thermal-limit-controller when the test lamp lights, cut-in temperature. Record the temperature for the office record.
2. After the cut-in temperature has been determined and while the bath is above the cut-in temperature, allow the bath to cool slowly at a rate not exceeding 0.5ºC (1ºF) per thirty (30) seconds. Observe the temperature reading on the thermal-limit-controller when the test lamp goes out, cut-out temperature. Determine that the cut-out temperature, on the thermal-limit-controller, is equivalent to or greater than the chose pasteurization or aseptic processing standard. Where adjustment is necessary, refer to the manufacturer's instructions. After adjustment, repeat the procedure above and when the results are satisfactory, record the results for the office record.
3. Repeat the procedure for the other two (2) sensing elements, i.e., the vacuum chamber and the FDD. Rewire the test lamp in series with the control contacts from each sensing element, respectively. When proper cut-out temperatures have been verified for all three (3) sensing elements, seal the thermal-limit-controller system.

TEST 11.

CONTINUOUS-FLOW HOLDING TUBES - HOLDING TIME

Reference: Item 16p (B), (C) and (E)
Continuous-flow holding tubes shall be tested for holding times by one (1) of the following applicable tests:

11.1 HTST PASTEURIZERS
(Except for magnetic flow meter based timing systems)

Application: To all HTST pasteurizers employing a holding time of fifteen (15) seconds or longer.
Frequency: Upon installation; semi-annually thereafter; whenever the seal on the speed setting is broken; any alteration is made affecting the holding time, the velocity of the flow, such as the replacement of the pump, motor, belt, drive or driven pulleys, or a decrease in the number of

HTST plates or the capacity of holding tube; or whenever a check of the capacity of the holding tube indicates a speedup.

Criteria: Every particle of milk or milk product shall be held for at least fifteen (15) seconds in both the forward and diverted-flow positions.

Apparatus:

1. Electrical conductivity measuring device, which is capable of detecting change in conductivity and equipped with standard electrodes;
2. Table salt (sodium chloride);
3. A suitable apparatus for injecting the salt solution (50 ml syringe); and
4. An accurate timing device.

Method: The holding time is determined by timing the interval for an added trace substance to pass through the holding tube. Although the time interval of the fastest particle of milk is desired, the conductivity test is made with water. The results found with water are converted to the milk flow time, by formulation, since a pump may not deliver the same amount of milk as it does water.

Procedure:

1. Examine the entire system to insure that all flow-promoting equipment is operating at maximum capacity and all flow-impeding equipment is so adjusted or bypassed as to provide the minimum of resistance to the flow. There shall be no leakage on the suction side of the timing pump.
2. Adjust the variable speed pump to its maximum capacity, preferably with a new belt and full size impellers. Check the homogenizer for seals, and/or gears or pulley identification. Check the AC variable speed timing pump control box for seals. For systems that employ a liquid ingredient injection (slurry) system as described in Appendix H., the slurry pump must be energized and running at its maximum speed and the slurry supply tank must be completely filled with water.
3. Install one (1) electrode at the inlet to the holding tube and the other electrode in the holding tube outlet.
4. Operate the pasteurizer, using water at pasteurization temperature, with the FDD in the forward-flow position.
5. Quickly inject saturated sodium chloride solution into the holding tube inlet.
6. The timer should start when it detects a change in conductivity and the beginning of the holding tube.
7. The timer should stop when it detects a change in conductivity and the end of the holding tube.
8. Record the results.
9. Repeat the test six (6) or more times, until six successive results are within 0.5 seconds of each other. The average of these six (6) tests is the holding time for water in forward-flow. When consistent readings cannot be obtained, purge the equipment, check instruments and connections and check for air leakage on the suction side. Repeat this Test. Should consistent readings not be obtained, use the fastest time as the holding time for water.
10. Repeat **Procedures** 4 through 9 for the holding time on water in diverted-flow.

For all gear driven timing pumps; or for those homogenizers used as timing pumps, when the measured holding time for water is less than 120% of the legal holding time, complete **Procedures** 11, 12 and 13. For those homogenizers used as timing pumps, when the measured

holding time for water is 120% or more of the legal holding time, **Procedure** 11 is optional and 12 and 13 are not required.

11. With the pump at the same speed and all other equipment adjusted as in **Procedure** 1, time the filling of a 38 liter (10 gallon) can with a measured weight of water, using the discharge outlet with the same head pressure as in normal operation. Average the time of several trials. Since flow rates of the large capacity units make it very difficult to check by filling a 38 liter (10 gallon) can, it is suggested, that a calibrated tank of considerable size be used.

12. Repeat **Procedure** 11 using milk.

13. Compute the holding time for milk from one (1) of the following formulas, either by volume or by weight. Compute separately for forward-flow and diverted-flow. Re-seal the regulatory controls as necessary.

BY VOLUME:

The holding time for milk is equal to the holding time for water; times the quotient of the time it takes to deliver a volume of milk; divided by the time it takes to deliver the same volume of water.

$$\mathbf{Tm = Tw(Vm/Vw)}$$

Where: Tm = Adjusted product holding time for milk.
Tw = Holding time for water, the salt test results.
Vw = Time, usually in seconds, that it takes to pump a volume of water.
Vm = Time, usually in seconds, that it takes to pump the same volume of milk.

BY WEIGHT (Using specific gravity):

The holding time for milk is equal to the specific gravity of milk; times the holding time for water; times the quotient of the time it takes to deliver a measured weight of milk; divided by the time it takes to deliver the same weight of water.

$$\mathbf{Tm = 1.032xTw(Wm/Ww)}$$

Where: 1.032 = The specific gravity of milk.
Tm = Adjusted product holding time for milk.
Tw = Holding time for water, the salt test results.
Wm = Time, usually in seconds, that it takes to pump a measured weight of milk.
Ww = Time, usually in seconds, that it takes to pump the same measured weight of water.

14. Record the results for the office record.

Corrective Action: When the computed holding time for milk is less than that required, either in forward-flow or diverted-flow, the speed of the timing pump shall be reduced or an adjustment made in the holding tube and the timing test repeated until a satisfactory holding time is achieved. Should an orifice be used to correct the holding time in diverted-flow, there should be

no excessive pressure exerted on the underside of the valve seat of the FDD. Governors shall be sealed on motors that do not provide a constant speed as provided in Item 16p(B)5.b.

11.2A MAGNETIC FLOW METER BASED TIMING SYSTEMS CONTINUOUS FLOW - HOLDING TIME

Application: To all HTST pasteurizers with a magnetic flow meter based timing system, used in lieu of a timing pump.
Frequency: Upon installation; semiannually thereafter; whenever a seal on the flow alarm is broken; any alteration is made affecting the holding time, the velocity of the flow or the capacity of holding tube; or whenever a check of the capacity indicates a speed up.
Criteria: Every particle of milk or milk product shall be held for at least a minimum holding time in both the forward and diverted-flow positions.
Apparatus:
1. Electrical conductivity measuring device, which is capable of detecting change in conductivity and equipped with standard electrodes;
2. Table salt (sodium chloride);
3. A suitable apparatus for injecting the salt solution (50 ml syringe); and
4. An accurate timing device.

Method: The holding time is determined by timing the interval for an added trace substance to pass through the holding tube.
Procedure:
1. Examine the entire system to ensure that all flow-promoting equipment is operating at maximum capacity and all flow-impeding equipment is so adjusted or bypassed as to provide the minimum resistance to the flow.
2. Adjust the set point on the flow alarm to its highest possible setting.
3. Adjust the set point on the flow recorder/controller to a flow rate estimated to yield an acceptable holding time.
4. Install one (1) electrode at the inlet to the holding tube and the other electrode at the holding tube outlet.
5. Operate the pasteurizer, using water, above the pasteurization temperature, with the FDD in forward-flow.
6. Quickly inject the saturated sodium chloride solution into the holding tube inlet.
7. The timer should start when it detects a change in conductivity and the beginning of the holding tube.
8. The timer should stop when it detects a change in conductivity and the end of the holding tube.
9. Record the results.
10. Repeat the test six (6) or more times, until six (6) successive results are within 0.5 seconds of each other. The average of these six (6) tests is the holding time for water in forward-flow. When consistent readings cannot be obtained, purge the equipment, check the instruments and connections; and check for air leakage on the suction side of the pump, located at the constant-level tank. Repeat this Test. If six (6) consecutive readings cannot be achieved within 0.5 seconds of each other, the pasteurizing system is in need of repair.
11. With the flow recorder/controller at the same set point as in **Procedure** 3, time the filling of a 38 liter (10 gallon) can with a measured volume of water using the discharge outlet, with the

same head pressure as in normal operation. Average the time of several trials. Since the flow rates of the large capacity units make it very difficult to check by filling a 38 liter (10 gallon) can, it is suggested that a calibrated tank of considerable size be used. This procedure is not a required Test; it is at the option of the Regulatory Agency.
12. Re-seal the regulatory controls as necessary and record this result for the office record.
Corrective Action: When the computed holding time for milk is less than that required, the set point on the flow recorder/controller shall be decreased, or an adjustment made in the holding tube, and the timing test repeated until a satisfactory holding time is achieved.

11.2B CONTINUOUS-FLOW HOLDING TUBES - FLOW ALARM

Application: To all continuous-flow pasteurization and aseptic processing systems using a magnetic flow meter based timing system to replace a timing pump. When testing aseptic processing systems, the "milk or milk product divert system" or "milk or milk product divert valve" or "acceptable control system" may be substituted for the "FDD" when it is referenced in this Test.
Frequency: Upon installation; semiannually thereafter; whenever the seal on the flow alarm is broken; any alteration is made affecting the holding time, the velocity of the flow or the capacity of holding tube; or whenever a check of the capacity indicates a speedup.
Criteria: When flow rate equals or exceeds the value at which the holding time was measured, the flow alarm shall cause the FDD to assume the diverted position, even though the temperature of the milk or milk product in the holding tube is above the pasteurization or aseptic processing temperature.
Apparatus: None.
Method: Adjust the set point of the flow alarm so that flow is diverted when the flow rate equals or exceeds the value at which the holding time was measured or calculated. (Refer to **Procedure** 3 or 4 of this Test)
Procedure:
1. Operate the pasteurizer or aseptic processing equipment in forward-flow, at the flow rate at which holding time was measured, using water above the pasteurization or aseptic processing temperature.

NOTE: The appropriate temperature elements may be placed in a water or oil bath to simulate the normal pasteurization or aseptic processing temperature of the holding tube as an alternative to heating the water in the system above the pasteurization or aseptic processing temperature. Observation and recording of this temperature should be done as described in **Procedures** 3 and 4 below.

2. Adjust the set point on the flow alarm slowly downward until the frequency pen on the flow recorder/controller indicates that flow has been diverted.

NOTE: When performing this Test on systems that operate above the boiling point of water, be sure that the system is cooling to avoid the possibility of serious burns.

3. Observe that the FDD moved to the diverted position, while water passing through the holding tube remained above the pasteurization or aseptic processing temperature.

4. Re-seal the regulatory controls as necessary and record the set point of the flow alarm; the occurrence of flow-diversion; and the temperature of the water in the holding tube, for the office record.

Corrective Action: If the FDD does not move to the diverted position, when the frequency pen of the recorder/controller indicates a diversion, a modification or repair of the control wiring is required.

11.2C CONTINUOUS-FLOW HOLDING TUBES - LOW FLOW/LOSS-OF-SIGNAL ALARM

Application: To all continuous-flow pasteurization and aseptic processing systems using a magnetic flow meter based timing system to replace a timing pump. When testing aseptic processing systems, the "milk or milk product divert system" or "milk or milk product divert valve" or "acceptable control system" may be substituted for the "FDD" when it is referenced in this Test.

Frequency: Upon installation; semiannually thereafter; whenever the seal on the flow alarm is broken; or any alteration is made affecting the holding time.

Criteria: Forward-flow occurs only when flow rates are above the loss-of-signal alarm set point.

Apparatus: None

Method: By observing the actions of the frequency pens on the recorder/controller and the position of the FDD.

Procedure:

1. Operate the pasteurizer or aseptic processing equipment in forward-flow, at a flow rate below the flow alarm set point and above the low flow/loss-of-signal alarm set point, using water.
2. Disrupt power to the magnetic flow meter or decrease the flow through the flow meter below the low flow/loss-of-signal alarm set point. Observe that the FDD and both the safety thermal limit recorder/controller frequency pen and the flow rate frequency pen assume the diverted-flow position.
3. Re-seal the regulatory controls as necessary and record the results for the office record.

Corrective Action: If the valve does not divert or the pens do not move, adjustment of the low flow/loss-of-signal alarm or a modification or repair of the control wiring is required.

11.2D CONTINUOUS-FLOW HOLDING TUBES - FLOW CUT-IN AND CUT-OUT

Application: To all HTST pasteurizers using a magnetic flow meter based timing system to replace a timing pump.

Frequency: Upon installation; semiannually thereafter; whenever the seal on the flow alarm is broken; any alteration is made affecting the holding time, the velocity of the flow or the capacity of holding tube; or whenever a check of the capacity indicates a speedup.

Criteria: Forward-flow occurs only when flow rates are below the flow alarm set point and above the low flow/loss-of-signal alarm set point.

Apparatus: None.

Method: By observing the recorder/controller readings along with the action of the frequency pen on the recorder/controller.

Procedure:
1. Operate the pasteurizer in forward-flow, at a flow rate below the flow alarm set point and above the low flow/loss-of-signal alarm set point, using water above the pasteurization temperature.
2. Using the flow recorder/controller, increase the flow rate slowly until the frequency pen on the recorder/controller indicates a flow diversion, flow cut-out point. The FDD will also assume the diverted position. Observe the reading of flow rate from the recorder/controller at the instant flow cut-out occurs, as indicated by the frequency pen.
3. With the pasteurizer operating on water, above the pasteurization temperature, and with the FDD diverted because of excessive flow rate, slowly decrease the flow rate until the frequency pen on the flow recorder/controller indicates the start of a forward-flow movement, flow cut-in point. Because of the time delay relay described in Test 11.2, the FDD will not move immediately to the forward-flow position. Observe the reading from the recorder/controller at the instant flow cut-in occurs, as indicated by the frequency pen.
4. Re-seal the regulatory controls as necessary and record the results for the office record.

Corrective Action: If the cut-in or cut-out point occurs at a flow rate equal to or greater than the value at which holding time was measured, adjust the flow alarm to a lower set point and repeat the Test.

11.2E CONTINUOUS-FLOW HOLDING TUBES - TIME DELAY RELAY

Application: To all HTST pasteurizers with a FDD located at the end of the holding tube that use a magnetic flow meter based timing system to replace a timing pump.
Frequency: Upon installation; semiannually thereafter; whenever the seal on the flow alarm is broken; any alteration is made affecting the holding time, the velocity of the flow or the capacity of the holding tube; or whenever a check of the capacity indicates a speedup.
Criteria: Following the flow cut-in, as described in Test 11.2D, forward-flow shall not occur until all milk or milk product in the holding tube has been held at or above pasteurization temperature for at least the minimum holding time.
Apparatus: Stopwatch.
Method: Set the time delay equal to or greater than the minimum holding time.
Procedure:
1. Operate the pasteurizer in forward-flow, at a flow rate below the flow alarm set point and above the low flow/loss-of-signal alarm set point, using water above the pasteurization temperature.
2. Using the flow recorder/controller, increase the flow rate slowly until the frequency pen on the flow recorder/controller indicates a diversion movement and the FDD moves to the diverted position. There shall be no time delay between the movements of the frequency pen and the FDD.
3. With the pasteurizer operating on water, above the pasteurization temperature, with the FDD diverted because of excessive flow rate, slowly decrease the flow rate.
4. Start the stopwatch the instant the frequency pen on the flow recorder/controller indicates the start of a forward-flow movement.
5. Stop the stopwatch the instant the FDD starts to move to the forward-flow position.
6. Record the results for the office record.
7. Install and seal the enclosure over the time delay relay.

Corrective Action: If the time delay is less than the minimum holding time, increase the time setting on the time delay and repeat Test 11.2E.

11.2F HIGH FLOW ALARM RESPONSE TIME

Application: To all continuous-flow pasteurization and aseptic processing systems using a magnetic flow meter based timing system to replace a timing pump. When testing aseptic processing systems, the "milk or milk product divert system" or "milk or milk product divert valve" or "acceptable control system" may be substituted for the "FDD" when it is referenced in this Test.
Frequency: Upon installation; semiannually thereafter; whenever the seal on the flow alarm is broken; any alteration is made affecting the holding time, the velocity of the flow or the capacity of the holding tube; or whenever a check of the capacity indicates a speedup.
Criteria: When flow rate equals or exceeds the value at which the holding time was measured, the flow alarm shall cause the FDD to assume the diverted position within one (1) second.
Apparatus: Stopwatch.
Method: Rapidly increase the flow rate to exceed the high flow alarm and verify that the FDD shifts to the diverted position within one (1) second.
Procedure:
1. Operate the pasteurizer or aseptic processing equipment in forward-flow, at a flow rate 25% below the high flow alarm as determined in Test 11.2B (Procedure 2).
2. Mark the recorder chart with the high flow alarm set point.

NOTE: The appropriate temperature elements may be placed in a water or oil bath to simulate the normal pasteurization or aseptic processing temperature of the holding tube as an alternative to heating the water in the system above the pasteurization or aseptic processing temperature. Observation and recording of this temperature should be done as described in Procedures 3 and 4 below.

3. Increase the system flow rate as rapidly as practical to a point above the high flow alarm set point.

NOTE: When performing this Test on systems that operate above the boiling point of water, be sure that the system is cooling to avoid the possibility of serious burns.

4. Start the stopwatch when the flow rate recorder pen exceeds the high flow alarm set point.
5. Stop the stopwatch when the FDD has moved to the diverted position.
6. Record the elapsed time for the office record.

Corrective Action: If the response time exceeds one (1) second, immediate corrective action must be taken.

11.3 CALCULATED HOLD FOR INDIRECT HEATING

Application: To all HHST pasteurizers using indirect heating.
Frequency: When installed; semiannually thereafter; whenever the seal on the speed setting is broken; whenever any alteration is made affecting the holding time, the velocity of the flow, i.e.,

replacement of the pump, motor, belt, driver or driven pulley, decrease in number of heat-exchange plates or the capacity of holding tube; and whenever a check of the capacity indicates a speedup.

Criteria: Every particle of milk or milk product shall be held for the minimum holding time in both the forward and diverted-flow positions.

Apparatus: No supplemental materials needed.

Method: Fully developed laminar flow is assumed and holding tube length is calculated. An experimental determination of the pumping rate is required; this is accomplished by determining the time required for the pasteurizer to fill a vessel of known volume; converting these data by division to obtain flow rate in gallons per second; and multiplying this value by the proper value in Table 14 to determine the required holding tube length. Holding tube lengths for HHST pasteurizers with indirect heating for a pumping rate of 1 gallon/second are:

Table 14. Holding Tube Length - HHST Pasteurizers - Indirect Heating

	Tubing Size (inches)		
Holding Time (sec.)	2	2-1/2	3
	Holding Tube Length (inches)		
1.0	168.0	105.0	71.4
0.5	84.0	52.4	35.7
0.1	16.8	10.5	7.14
0.05	8.4	5.24	3.57
0.01	1.68	1.05	.714

Procedure:

1. Examine the entire system to ensure that all flow-promoting equipment is operating at maximum capacity and all flow-impeding equipment is so adjusted or bypassed to provide the minimum resistance to the flow. Remove in-line filters; make sure the booster pump is operating; and that vacuum equipment in the system is operating at the maximum vacuum. Also, before the Tests are begun, operate the pasteurizer at maximum flow for a sufficient time to purge the air from the system, about fifteen (15) minutes, and tighten the pipe connections on the suction side of the timing pump, tight enough to exclude the entrance of air. With the pasteurizer operating on water, adjust the timing pump to its maximum capacity, preferably with a new belt and full-size impellers.
2. Determine that no flow exists in the diverted line, and measure the time required to deliver a known volume of water at the discharge of the pasteurizer in forward-flow. Repeat the Test determine that the measurements are consistent.
3. Repeat **Procedures** 1 and 2 in diverted-flow by collecting the effluent at the discharge of the divert line.
4. Select the greatest flow rate, the shortest delivery time for the known volume; and calculate the flow rate in gallons per second by dividing the known volume by the time required to collect the known volume. Multiply this value with the appropriate value in Table 14 to determine the required holding tube length.
5. The holding tube may include fittings. The centerline length of the fitting is treated as an equivalent length of straight pipe. The centerline distance may be measured by forming a flexible steel tape along the centerline of the fitting. Determine the total length of the holding

tube by adding the equivalent lengths of the fittings to the measured lengths of straight pipe. Record the number and type of fittings, the number and length of straight pipe and the holding tube configuration for the office record. If the temperature sensor is located at the beginning of the holding tube, the holding tube shall be protected against heat loss by material that is impervious to water.

6. Re-seal the regulatory controls as necessary.

Alternate Procedure for Measuring Flow Rate: For pasteurizers of large capacity, the method of measuring flow rate at the discharge of the pasteurizer is inconvenient. The following alternate Test procedure may be used. Remove the divert line from the constant-level tank and turn off the milk or milk product pump feeding the constant-level tank. Suspend a sanitary dipstick in the constant-level tank and operate the pasteurizer at maximum capacity. Record the time required for the water level to move between two (2) graduations on the dipstick. The volume of water is calculated from the dimensions of the constant-level tank and the drop in water level. Flow rate is determined as follows: Divide the volume of water removed from the constant-level tank by the time, in seconds, required to remove it. Then use Table 14 to calculate the required holding tube length.

Alternate Procedures for Determination of Holding Tube Length for Non-Standard Pipe Size: The holding tube length may be accurately calculated from the following equation:

$$\mathbf{L = 588\ Qt/D^2}$$

Where: L = Holding tube length (inches)
Q = Pumping rate (gallons per second)
t = Holding time standard (seconds)
D = Internal diameter of holding tube (inches)

Table 15 provides internal pipe diameters for piping in HHST holding tubes with nominal external diameters of 2.0, 2.5, 3.0 and 4.0 inches.

NOTE: Internal diameters, for holding tubes designed for high pressure and for holding tubes with piping sizes not listed in Table 15, must be individually determined and the minimum length calculated using the above formula.

Table 15. Dimension for Standard Stainless Steel Sanitary Tubing[1]

Nominal External Diameter[2]	Internal Diameter[2]
2.0	1.870
2.5	2.370
3.0	2.870
4.0	3.834

[1] Abstracted from Table 6.1 "Pipe and Heat Exchanger Tube Dimensions", Fundamentals of Food Process Engineering, 1979, R. T. Toledo, AVI Press
[2] Measurements are in inches.

After the minimum required holding tube length is obtained from the calculation above, the length of the holding tube is measured to determine that it is at least as long as the calculated

length. The holding tube may include fittings or, for the shorter holding times, may be a fitting. The centerline length of the fitting is treated as an equivalent length of straight pipe. The centerline distance may be measured by forming a flexible steel tape along the centerline of the fitting.

Corrective Action: If the length of the holding tube is shorter than the calculated length, reseal the timing pump at a slower maximum speed, or lengthen the holding tube, or both, and repeat this Procedure.

11.4 CALCULATED HOLD FOR DIRECT HEATING

Application: To all HHST pasteurizers using direct contact heating.

Frequency: When installed; semiannually thereafter; whenever the seal on the speed setting is broken; whenever any alteration is made affecting the holding time, the velocity of the flow, i.e., replacement of pump, motor, belt, driver or driven pulley, or a decrease in the number of heat exchange plates; or the capacity of the holding tube; and whenever a check of the capacity indicates a speedup.

Criteria: Every particle of milk or milk product shall be held for the minimum holding time in both forward and diverted-flow positions.

Apparatus: No supplemental materials needed.

Method: Fully developed laminar flow and a temperature increase by steam injection of 67ºC (120ºF) are assumed, the processor chooses the temperature-time standard and the required holding tube length is calculated from an experimental determination of the pumping rate.

Procedure:

1. Examine the entire system to ensure that all flow-promoting equipment is operating at maximum capacity and all flow-impeding equipment is so adjusted or bypassed as to provide the minimum resistance to the flow. Remove in-line filters; make certain booster pumps are operating; and that vacuum equipment in the system is operating at maximum vacuum. Also, before the tests are begun, operate the pasteurizer at maximum flow for a sufficient time to purge the air from the system, about fifteen (15) minutes, and tighten the pipe connections on the suction side of the timing pump to exclude the entrance of air. With the pasteurizer operating on water, adjust the timing pump to its maximum capacity.
2. Determine that no flow exists in the diverted line, and measure the time required to deliver a known volume of water at the discharge of the pasteurizer in forward-flow. Repeat the Test to determine that the measurements are consistent.
3. Repeat **Procedures** 1 and 2 in diverted-flow by collecting the effluent at the discharge of the divert line.
4. Select the greatest flow rate, the shortest delivery time for the known volume, and calculate the flow rate in gallons per second, by dividing the known volume, by the time required to collect the known volume. Multiply this value, with the appropriate value in Table 16 to determine the required holding tube length. Holding tube lengths for direct contact heating pasteurizers with a pumping rate of 1 gallon/second are:

Table 16. Holding Tube Length, HHST Pasteurizers, Direct Heating			
Tubing Size (inches)			
Holding time (sec.)	2	2-1/2	3
	Holding tube length (inches)		
1	188.0	118.0	80.0
0.5	94.0	59.0	40.0
0.1	18.8	11.8	8.0
0.05	9.40	5.90	4.0
0.01	1.88	1.18	0.8

5. The holding tube may include fittings. The centerline length of the fitting is treated as an equivalent length of straight pipe. The centerline distance may be measured by forming a flexible steel tape along the centerline of the fitting. Determine the total length of the holding tube by adding the equivalent lengths of the fittings to the measured lengths of straight pipe. If the actual holding tube length is equivalent to or greater than the required holding tube length, record the number and type of fittings, the number and length of straight pipes and the holding tube configuration, for the office record. Make sure that the holding tube slopes upward at least 6.35 millimeters (0.25 inch) per foot. If the temperature sensor is located at the beginning of the holding tube, the holding tube shall also be protected against heat loss by material that is impervious to water.
6. Re-seal the regulatory controls as necessary.

Alternate Procedure for Measuring Flow Rate: For pasteurizers of large capacity, the method of measuring flow rate at the discharge of the pasteurizer is inconvenient. The following alternate Test procedure may be used. Remove the divert line from the constant-level tank and turn off the milk or milk product pump feeding the constant-level tank. Suspend a sanitary dipstick in the constant-level tank and operate the pasteurizer at maximum capacity. Record the time required for the water level to move between two graduations on the dipstick. The volume of water is calculated from the dimensions of the constant-level tank and the drop in water level. Flow rate is determined as follows: Divide the volume of water, in gallons, removed from the constant-level tank by the time, in seconds, required to remove it. Then use Table 16 to calculate the required holding tube length.

Alternate Procedures for Determination of Holding Tube Length for Non-Standard Pipe Size: The holding-tube length may also be accurately calculated from the following equation:

$$\mathbf{L = (588\ Qt \times 1.12)/D^2}$$

Where: L = Holding-tube length (inches)
Q = Pumping rate (gallons per second)
t = Holding time standard (seconds)
D = Internal diameter of holding tube (inches).
1.12 = 12% expansion for steam

Table 15 provides internal pipe diameters for piping in HHST holding tubes with nominal external diameters of 2.0, 2.5, 3.0 and 4.0 inches.

NOTE: Internal diameters, for holding tubes designed for high pressure, and for holding tubes with piping sizes not listed in Table 15, must be individually determined and the minimum length calculated using the above formula.

After the minimum required holding tube length is obtained from the calculation above, the length of the holding tube is measured to determine that it is at least as long as the calculated length. The holding tube may include fittings or, for the shorter holding times, may be a fitting. The centerline length of the fitting is treated as an equivalent length of straight pipe. The centerline distance may be measured by forming a flexible steel tape along the centerline of the fitting.

Corrective Action: If the length of the holding tube is shorter than the calculated length, reseal the timing pump at a slower maximum speed, or lengthen the holding tube, or both, and repeat the Procedure.

11.5 HOLDING TIME - STEAM INFUSERS WITH STEAM PRESSURE RELIEF VALVE AND VACUUM CHAMBER ORIFICE USED IN PLACE OF A TIMING PUMP

Application: To all HHST pasteurizers using direct steam infusion heating and using a steam pop-off valve and a vacuum chamber orifice in place of a timing pump.

Frequency: Upon installation; every three (3) months thereafter; or when a regulatory seal has been broken.

Criteria: Every particle of milk or milk product shall be held for the minimum holding time in both forward and diverted-flow positions.

Apparatus: No supplemental materials needed.

Method:

1. The steam infuser shell or feed line shall be equipped with a pressure relief valve. This pressure relief valve shall be located and sized so that the total pressure inside the infuser can never exceed the set point on this pressure relief valve.
2. An orifice or restriction, permanently installed in a noticeable fitting, shall be placed in the holding tube just prior to the vacuum chamber. The opening in the orifice or restriction, shall be sized to ensure a minimum milk or milk product residence time at least as long as that specified in the chosen HHST standard.
3. The size of the opening in the orifice or restriction and the setting of the pressure relief valve shall be determined by trial and error. Once an appropriate maximum flow rate has been determined and a legal minimum holding time has been calculated, both the restriction or orifice and the steam pressure setting on the pressure relief valve shall be sealed so that neither can be changed.
4. The Regulatory Agency shall keep records of the orifice or restriction size. They shall also keep records of the location, size, setting and manufacturer of the pressure relief valve.

Procedure:

1. Examine the entire system to ensure that all flow-promoting equipment is operating at maximum capacity and all flow-impeding equipment is so adjusted or bypassed as to provide the minimum resistance to the flow.
2. The steam pressure in the infuser shall be raised to a level just below the pressure relief point on the valve.
3. Any back-pressure valves or other variable restrictions in the holding tube shall be normally placed into the fully open position.

4. All air bleeds to the vacuum chamber shall be closed so that the chamber will be operating under maximum vacuum.
5. Before the Tests are begun, operate the pasteurizer at maximum flow for a sufficient time to purge the air from the system, about fifteen (15) minutes, and tighten the pipe connections to exclude the entrance of air.
6. Determine that no flow exists in the diverted line, and measure the time required to deliver a known volume of water at the discharge of the pasteurizer in forward-flow.
7. Repeat the Test to determine that the measurements are consistent.
8. Repeat **Procedures** 1 through 5 in diverted-flow by collecting the effluent at the discharge of the divert line.
9. Select the greatest flow rate, the shortest delivery time for the known volume, and calculate the flow rate in gallons per second, by dividing the known volume by the time required to collect the known volume.
10. Multiply this value, gallons per second, with the appropriate value in Table 16 to determine the required holding tube length.
11. Holding tube lengths for direct contact heating pasteurizers with a pumping rate of 1 gallon/second are specified in Table 16.
12. The holding tube may include fittings. The centerline length of the fitting is treated as an equivalent length of straight pipe. The centerline distance may be measured by forming a flexible steel tape along the centerline of the fitting. Determine the total length of the holding tube by adding the equivalent lengths of the fittings to the measured lengths of straight pipe.
13. Make sure that the holding tube slopes upward at least 6.35 millimeters (0.25 inch) per foot.
14. If the temperature sensor is located at the beginning of the holding tube, the holding tube shall also be protected against heat loss by material that is impervious to water.
15. If the actual holding tube length is equivalent to or greater than the required holding tube length, record the number and type of fittings, the number and length of straight pipes and the holding tube configuration for the office record.
16. Re-seal the regulatory controls as necessary.

Corrective Action: If the length of the holding tube is shorter than the calculated length, reseal the timing pump at a slower maximum speed, or lengthen the holding tube, or both, and repeat the Test.

TEST 12.

THERMAL-LIMIT-CONTROLLER FOR CONTROL - SEQUENCE LOGIC

References: Items 16p (B) and (E)

Thermal-limit-controllers used with HHST and HTST pasteurizers that have the FDD located downstream from the regenerator and/or cooler and aseptic processing systems shall be tested by one (1) of the following applicable Tests at the frequency prescribed:

12.1 PASTEURIZATION AND ASEPTIC PROCESSING - INDIRECT HEATING

Application: To all HHST and HTST pasteurizers that have the FDD located downstream from the regenerator and/or cooler and aseptic processing systems using indirect heating. When testing aseptic processing systems, the "milk or milk product divert system" or "milk or milk product

divert valve" or "acceptable control system" may be substituted for the "FDD" when it is referenced in this Test.

Frequency: Upon installation; every three (3) months thereafter; or when a regulatory seal has been broken.

Criteria: The pasteurizer, or aseptic processing equipment, shall not operate in forward-flow until the milk or milk product surfaces downstream from the holding tube have been sanitized, or in the case of aseptic processing equipment, sterilized. Upon start-up, surfaces shall be exposed to fluid at pasteurization temperature, or in the case of aseptic processing equipment, sterilizing temperature, for at least the required pasteurization or sterilization time. If any public health control causes the FDD to assume the diverted flow position due to incorrect temperature, pressure or flow, forward-flow shall not be re-achieved until the milk or milk product-contact surfaces downstream from the holding tube have been re-sanitized, or in the case of aseptic processing equipment, re-sterilized.

Apparatus: A constant temperature bath of water, or oil, and the test lamp from the pneumatic testing device described in Test 9.1 may be used to check the control-sequence logic of the thermal-limit-controller.

Method: The control-sequence logic of the thermal-limit-controller is determined by monitoring the electric signal from the thermal-limit-controller during a series of immersions and removals of the two (2) sensing elements from a bath heated above the cut-in temperature.

Procedure:

1. Heat the water or oil bath to a constant temperature, a few degrees above the cut-in temperature on the thermal-limit-controller. Wire the test lamp in series with the signal from the thermal-limit-controller to the FDD. Some processors may have time delays built into their control logic in excess of that required for public health reasons. If so equipped, by-pass these timers or account for their effect in delaying forward-flow.
2. Immerse the sensing element of the FDD in the bath, which is above the cut-in temperature. The test lamp should remain unlighted, i.e., diverted-flow. Leave the sensing element in the bath.
3. Immerse the sensing element from the holding tube in the bath. The test lamp should light up, i.e., forward-flow after a minimum time delay of one (1) second for continuous-flow pasteurization systems. For aseptic processing systems no delay is required if the filed process includes a documented sterilization period.
4. Remove the sensing element of the FDD from the bath. The test lamp should remain lighted, i.e., forward-flow.
5. Remove the holding tube sensing element from the bath. The test lamp should turn off immediately, i.e., diverted-flow.
6. Re-immerse the sensing element of the holding tube in the bath. The test lamp should remain unlighted, i.e., diverted-flow.
7. Re-seal the regulatory controls as necessary.

Corrective Action: If the control-sequence logic of the thermal-limit-controller does not follow these Procedures, the instrument shall be reconfigured to conform to this logic.

12.2 PASTEURIZATION AND ASEPTIC PROCESSING - DIRECT HEATING

Application: To all HHST and HTST pasteurizers that have the FDD located downstream from the regenerator and/or cooler and aseptic processing systems using direct contact heating. When testing aseptic processing systems, the "milk or milk product divert system" or "milk or milk product divert valve" or "acceptable control system" may be substituted for the "FDD" when it is referenced in this Test.

Frequency: Upon installation; every three (3) months thereafter; or when a regulatory seal has been broken.

Criteria: The pasteurizer, or aseptic processing equipment, shall not operate in forward-flow until the milk or milk product surfaces downstream from the holding tube have been sanitized, or in the case of aseptic processing equipment, sterilized. Upon start-up, surfaces shall be exposed to fluid at pasteurization temperature, or in the case of aseptic processing equipment, sterilizing temperature for at least the required pasteurization or sterilization time. If the milk or milk product temperature falls below the pasteurization or sterilization standard in the holding tube, forward-flow shall not be re-achieved until the milk or milk product-contact surfaces downstream from the holding tube have been re-sanitized, or in the case of aseptic processing equipment, re-sterilized.

Apparatus: A constant temperature bath of water, or oil, and the test lamp from the pneumatic testing device described in Test 9.1 can be used to check the control-sequence logic of the thermal-limit-controller.

Method: The control-sequence logic of the thermal-limit-controller is determined by monitoring the electric signal from the thermal-limit-controller during a series of immersions and removals of the three (3) sensing elements from a bath heated above the cut-in temperature.

Procedure:

1. Heat a water or oil bath to a constant temperature, a few degrees above the cut-in temperature on the thermal-limit-controller. Wire the test lamp in series with the signal from the thermal-limit-controller to the FDD. Some processors have time delays built into their control logic, in excess of that required for public health reasons. If so equipped, bypass these timers or account for their effect in delaying forward-flow. Before performing this test, make sure the pressure switches, which must be closed to achieve forward-flow, have also been bypassed.
2. Immerse the sensing element from the FDD in the bath that is above the cut-in temperature. The test lamp should remain unlighted, i.e., diverted-flow. Remove this sensing element from the bath.
3. Immerse the sensing element, from the vacuum chamber, in the bath. The test lamp should remain unlighted, i.e., diverted-flow. Remove the sensing element from the bath.
4. Immerse the two (2) sensing elements located at the vacuum chamber and the FDD, into the bath. The test lamp should remain unlighted, i.e., diverted-flow. Leave the two (2) sensing elements in the bath.
5. Immerse the third sensing element located at the holding tube, into the bath. The test lamp should light up, i.e., forward-flow, after a minimum time delay of one (1) second for continuous-flow pasteurization systems. For aseptic processing systems no delay is required if the filed process includes a documented sterilization period.
6. Remove the FDD sensing element from the bath. The test lamp should remain lighted, i.e., forward-flow.

7. Remove the vacuum chamber sensing element from the bath. The test lamp should remain lighted, i.e., forward-flow.
8. Remove the remaining, holding tube, sensing element from the bath. The test lamp should turn off, i.e., diverted-flow, immediately.
9. Re-immerse the holding tube sensing element into the bath. The test lamp should remain unlighted, i.e., diverted-flow.
10. Re-seal the regulatory controls as necessary.

Corrective Action: If the control-sequence logic of the thermal-limit-controller does not follow these Procedures, the instrument shall be reconfigured to conform to this logic.

TEST 13.

SETTING OF CONTROL SWITCHES FOR MILK OR MILK PRODUCT PRESSURE IN THE HOLDING TUBE

Reference: Item 16p (B) and (E)

Application: To all HHST pasteurizers and aseptic processing systems, which are capable of operating with product in forward-flow mode, with less than 518 kPa (75 psig) pressure in the holding tube. When testing aseptic processing systems, the "milk or milk product divert system" or "milk or milk product divert valve" or "acceptable control system" may be substituted for the "FDD" when it is referenced in this Test.

Frequency: Upon installation; every three (3) months thereafter; whenever the pressure switch seal is broken; and whenever the operating temperature is changed.

Criteria: The pasteurizer or aseptic processor shall not operate in forward-flow unless the product pressure in the holding tube is at least 69 kPa (10 psi) above the boiling pressure of the product.

Apparatus: A sanitary pressure gauge and a pneumatic testing device described in Test 9.1 can be used for checking and adjusting the pressure switch setting.

Method: The pressure switch is checked and adjusted so as to prevent forward-flow unless the milk or milk product pressure in the holding tube is at least 69 kPa (10 psi) above the boiling pressure of the milk or milk product.

Procedure:

1. From Figure 45 determine the pressure switch setting necessary for the operating temperature, not the diversion temperature, being used in the process. Install the sanitary pressure gauge, of known accuracy, and the pressure switch sensing-element on the pneumatic testing device.
2. Remove the seal and cover to expose the adjustment mechanism on the pressure switch. Place the test lamp in series with the pressure switch contacts or use some other method to monitor the cut-in signal.
3. Apply air pressure to the sensing element and determine the pressure gauge reading at the cut-in point of the switch, which should turn on the test lamp. If the pressure switch is short circuited, the lamp will be lit before air pressure is applied.
4. Determine that the cut-in pressure on the switch is equivalent to or greater than the required pressure from Figure 45. If adjustment is necessary, refer to the manufacturer's instructions.
5. After adjustment, repeat the Test.

6. When the results are satisfactory, seal the pressure switch setting and record the results for the office record.

For each HHST pasteurizer or aseptic processing system temperature, the milk or milk product pressure switch setting is as follows:

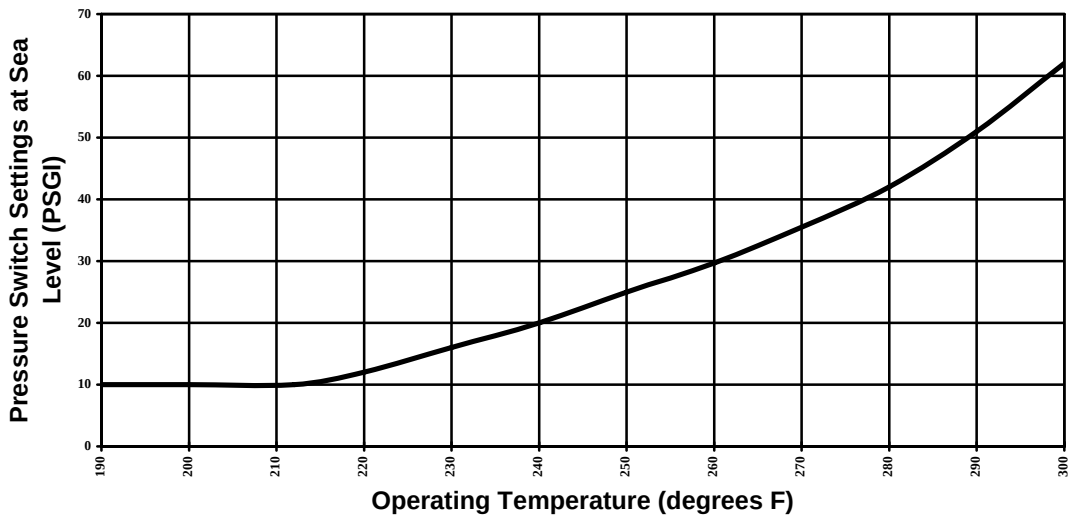

Figure 45. Pressure Switch Setting

This pressure setting shall be adjusted upward by the difference between the local normal atmospheric pressure and the atmospheric pressure at sea level.

TEST 14.

SETTING OF CONTROL SWITCHES FOR DIFFERENTIAL PRESSURE ACROSS THE INJECTOR

Reference: Item 16p (B) and (E)
Application: To all continuous flow pasteurizers and aseptic processing systems using direct contact heating. When testing aseptic processing systems, the "milk or milk product divert system" or "milk or milk product divert valve" or "acceptable control system" may be substituted for the "FDD" when it is referenced in this Test.
Frequency: Upon installation; every three (3) months thereafter; and whenever the differential pressure controller seal is broken.
Criteria: The pasteurizer or aseptic processor shall not operate in forward-flow unless the milk or milk product pressure drop across the injector is at least 69 kPa (10 psi).
Apparatus: A sanitary pressure gauge and a pneumatic testing device described in Test 9.1 can be used for checking and adjusting the differential pressure controller.
Method: Adjust the differential pressure switch to prevent forward-flow, unless the differential pressure across the injector is at least 69 kPa (10 psi).

Procedure:
1. Remove both pressure sensing elements from their original locations on the pasteurizer, or aseptic processor. Install a sanitary pressure gauge of known accuracy and the pressure-sensing element, which is installed prior to the steam injection, on the pneumatic testing device.
2. Leave the other pressure sensing element open to the atmosphere, but at the same height as the sensing element connected to the pneumatic testing device.
3. Wire the test lamp in series with the differential controller microswitch or use the method provided by the instrument manufacturer to monitor the cut-in signal.
4. Apply air pressure to the sensing element and determine, from the test lamp, the pressure gauge reading at the cut-in point of the differential pressure switch.
5. The differential pressure cut-in on the controller shall be at least 69 kPa (10 psi). If adjustment is necessary, refer to the manufacturer's instructions.
6. After adjustment, repeat the Test.
7. When the results are satisfactory, seal the instrument and record the results for the office record.

TEST 15.

ELECTRO MAGNETIC INTERFERENCE FROM HAND-HELD COMMUNICATION DEVICES

Application: To all electronic controls used to assure compliance with public health safeguards on continuous flow pasteurization and aseptic processing equipment that are installed in milk plants where hand-held communication devices are used.
Frequency: Upon installation; alteration of the electronic controls; every three (3) months thereafter; and whenever the type or wattage of the hand-held communication device(s) used in that facility is changed. Once a hand-held communication device has been shown to cause a given electronic control device to react adversely, the Test does not have to be repeated every three (3) months using that specific hand-held communication device on the adversely affected electronic control device. If the electronic control device is altered or there is a change in the hand-held communication device used, the electronic control device would be required to be tested.
Criteria: The use of hand-held devices shall have no adverse effect on the public health safeguards.
Apparatus: One (1) hand-held device representing each make and model used in the facility. The device must be operating at maximum output, fully charged.
Method: By observing the actual effect of the hand-held communication device, it can be determined if that device can be used near that equipment without compromising a public health safeguard.
Procedure:
1. Position the hand-held communication device 30.5 centimeters (12 inches) in front of the electronic control where the public health safeguard resides.
2. Place the communication device in the “send” mode for five (5) seconds and observe the effect on the public health safeguards. There should be no adverse effect. An adverse effect is any change that may adversely affect a public health safeguard.
3. If applicable, repeat the Test with the operator access door open

4. Repeat the above Test for each hand-held communication device identified in the Apparatus Section.
5. Repeat the Test for each electronic control used to regulate a pasteurization or aseptic processing public health safeguard.

> **For Example:** For temperature set point, operate the pasteurizer or aseptic processor on water in diverted-flow in the "Product" mode, at a steady temperature within 3ºC (5ºF) of the lowest cut-in temperature. In this example, an adverse effect is defined as forward-flow movement of the FDD or any artificial increase in temperature.

Corrective Action: Have the facility check for shielding, grounding and other installation concerns and retest. Until a solution, acceptable to the Regulatory Agency, can be found that does not adversely affect the public health safeguards, the hand-held device may not be used in the area of the public health safeguards.

APPENDIX J. STANDARDS FOR THE FABRICATION OF SINGLE-SERVICE CONTAINERS AND CLOSURES FOR MILK AND MILK PRODUCTS

PREFACE

Single-service containers and closures have been used in the dairy industry for many years. Industry applied quality assurance controls for manufacturing and handling of the materials have made it possible for these products to reach the point of use in a sanitary condition free from toxic materials, which may migrate into milk or milk products.

Within recent years, single-service container manufacturers have introduced new materials, equipment, and design concepts for these containers and closures. Evaluation of the industry's basic manufacturing and handling techniques and establishment of sanitation criteria assure that single-service containers and closures and the materials from which they are formed are safe and in compliance with bacteriological standards of Item 12p of this *Ordinance.*

STANDARDS FOR THE FABRICATION OF SINGLE-SERVICE CONTAINERS AND CLOSURES FOR MILK AND MILK PRODUCTS

A. PURPOSE AND SCOPE

The use of these Standards will ensure the production of sanitary containers and closures for milk and milk products, as defined in this *Ordinance*.

These Standards shall apply to all blank fabricators, pre-form bottle manufacturers, single-service glass container manufacturers, converters, printers, closure manufacturers, plastic laminators, sheet formers, blow molders, vacuum formers, plastic extruders, injection molders, pre-formers, manufacturers of valves, tubes, dispensing devices, sample containers and any other similar plants. These also apply to fabricating plants producing a component part(s), including fabricators of film and/or closures, which may become a product-contact surface and plants assembling components into a final assembled product. These requirements shall not apply to paper mills or resin manufacturing plants.

Milk and food plants manufacturing and/or selling containers to other milk plants, as defined in this *Ordinance*, excluding milk plants that condense and/or dry milk or milk products, shall meet all the requirements of these Standards.

Grade “A” milk plants, as defined in this *Ordinance*, excluding milk plants that condense and/or dry milk or milk products, shall use single-service containers and closures from plants certified and listed in the electronic publication of the *IMS List*.

These Standards provide certain criteria for the listing of certified single-service manufacturers in the current publication of the *IMS List*. (Refer to Section E.)

B. DEFINITIONS

The following definitions shall be employed in the application of these sanitation Standards:

1. "**Broke and Trim**" shall mean paper and paperboard that have been discarded anywhere in the process of manufacture, such as on paper-making machines in the form of trim. This may also include unprinted trim from the converting process, provided the trim has been handled, treated and transported in a clean, sanitary manner.
2. "**Closure**" shall mean a cap, lid, seal, tube, valve, lid material or other device in or on a container used for the purpose of enclosing or dispensing the contents.
3. "**Coatings**" shall mean any layer or covering which is applied to the product-contact surface.
4. "**Component Part**" shall mean any item that by itself, does not perform any function, but when assembled with one (1) or more component parts or closures, becomes a part of the single-service container or closure. These may include, but are not limited to blanks, sheeting, valves and valve parts, tubes, dispensing devices and sampling containers. All material used for fabrication of a component part must meet the requirements of the FFD&CA as amended.
5. "**Manufacturer**" shall mean any person or company in the business of manufacturing a single-service container or closure for the packaging or sampling of a Grade "A" milk or milk product.
6. "**Manufacturing Line**" shall mean a manufacturing process such as injection molding, extrusion, blow-molding, etc.
7. "**Metals**" shall mean those metals that are non-toxic, nonabsorbent and corrosion-resistant under conditions of intended use.
8. "**Non-toxic Materials**" shall mean materials that are free of substances, which may render the product injurious to health or which may adversely affect the flavor, odor, composition or bacteriological quality of the product and meet the requirements of the FFD&CA as amended.
9. "**Paper Stock**" shall mean any paper made from the following materials:
   a. Paper and paperboard manufactured from clean, sanitary virgin chemical or mechanical pulp or from "broke and trim" of such paper and paperboard, provided they have been handled, treated and stored in a clean, sanitary manner, or reclaimed fiber using acceptable or approved protocol in compliance with 21 CFR 176.260; and
   b. Components meeting the requirements of the FFD&CA as amended.
10. "**Plastic Molding, Forming, Extrusion, and Laminating Resins**" shall mean:
    a. Resins or an intimate admixture of resins with other ingredients, which meet the requirements of the FFD&CA as amended;
    b. Plastic composed solely of clean cuttings or regrind, provided they have been handled and maintained in a clean, sanitary manner; and
    c. Recycled plastic material when it complies with a protocol that has been reviewed and accepted by FDA.
11. "**Pre-forms**" shall mean a component not in final form for filling.
12. "**Product-Contact Surface**" shall mean those surfaces of the container or closure with which the product comes in contact with.
13. "**Production Scrap**" shall mean material which remains from the manufacture of single-service containers or closures, that has been handled or treated in such a manner that it does not comply with the definition for "broke and trim" or "regrind", but may be collected for recycling. It may contain material such as containers or trim that have fallen on the floor.

14. "**Regrind**" shall mean clean plastic material that is trimmed from the container or closure, and imperfectly formed containers or closures, which result from the manufacture of single-service containers and closures, provided it is handled in a clean, sanitary manner. This may be in its trimmed or molded form and ground in a suitable grinder within the plant. It shall not include any material, container or closure which comes from an unapproved source or whose source, chemical content or treatment is unknown, or which may have poisonous or deleterious material retained in the plastic, which migrates to the food at levels exceeding regulatory levels. Regrind, when transported from one (1) approved plant to another, shall be shipped in suitable, clean, sealed, properly labeled containers. This definition shall not preclude the use of regrind plastic material when it complies with a protocol that has been reviewed and accepted by FDA.

15. "**Sample Set**" shall mean:

a. For the rinse test, a minimum of four (4) containers shall be tested.

b. For the swab test, a minimum of four (4), 50 square centimeter areas of surface from separate containers shall be tested. In the case of containers or closures with a product-contact surface area smaller than 50 square centimeters, more than four (4) containers or closures to equal at least 50 square centimeters times four (4) will be required to be swabbed.

16. "**Sanitization**" shall mean the application of any effective method or substance to properly cleaned surfaces for the destruction of pathogens and other microorganisms as far as is practicable. Such treatment shall not adversely affect the equipment, the milk and/or milk product, or the health of consumers, and shall be acceptable to the Regulatory Agency. Methods of sanitization shall meet the requirements contained in Appendix F. of this *Ordinance*.

17. "**Single-Service Articles**" shall mean articles that are constructed wholly, in part, or in combination from paper, paperboard, molded pulp, plastic, metals, coatings or similar materials and intended by the manufacturer for one (1) usage only.

18. "**Single-Service Container**" shall mean any container having a milk or milk product-contact surface and used in the packaging, handling or storage of Grade "A" milk and milk products which is intended for one (1) use only.

C. BACTERIAL STANDARDS AND EXAMINATION OF SINGLE-SERVICE CONTAINERS AND CLOSURES

1. Paper stock shall meet the bacteriological standard of not more than two hundred fifty (250) colonies per gram as determined by the disintegration test. The paper stock supplier shall certify that their paper stock was manufactured in compliance with this Standard. This applies only to the paper stock prior to lamination.

2. Where a rinse test can be used, the residual microbial count shall not exceed fifty (50) per container, except that in containers less than 100 mL, the count shall not exceed ten (10), or when using the swab test, not over fifty (50) colonies per 8 square inches (1 per square centimeter) of product-contact surface in three (3) out of four (4) samples taken at random on a given day. All single-service containers and closures shall be free of coliform organisms.

3. During any consecutive six (6) months, at least four (4) sample sets shall be collected in at least four (4) separate months, except when three (3) months show a month containing two (2) sampling dates separated by at least twenty (20) days, and analyzed at an Official, Commercial or Industry Laboratory approved by the State Milk Laboratory Certifying Agency specifically for the examinations required under these Standards. (Refer to Item 12p of this *Ordinance* for sampling of containers and closures in milk plants.)

4. When a single-service container or closure is made from one (1) or more component parts as defined in this document, only those final assembled products that may have product-contact surface(s), must be sampled and tested for compliance with Section C.
5. A sample set from each manufacturing line, as defined in these Standards, shall consist of a minimum of four (4) containers or closures, when the rinse test is used, or a minimum of four (4) 50 square centimeters (cm^2) areas of surface, when the swab test is used.
6. The following criteria pertains to manufacturers of pre-forms and bottles preformed at one (1) plant and molded at a second plant:

a. The pre-forming plant must be IMS Listed but sampling of the pre-forms is not required at this plant.

b. If the first pre-forming plant is also molding the containers into their final form, this plant must be listed and the containers must be sampled at this plant.

c. If the second plant, where containers are molded into their final form, is a single-service manufacturer, this plant must be listed and the containers must be sampled at this plant.

d. If the second plant is a milk plant where containers are molded into their final form, for use only in that milk plant, the milk plant listing is sufficient, but the containers must be sampled at this plant.

Procedures for obtaining samples and for the laboratory examination of these products are contained in the latest edition of *SMEDP* and shall be in substantial compliance with these methods. Such procedures and examinations shall be evaluated in accordance with the current revision of the *EML.* A list of approved laboratories may be found in the current *IMS List*, which is published by FDA and available on the Internet at www.fda.gov.

D. FABRICATION PLANT STANDARDS

NOTE: To be used in conjunction with Form FDA 2359c-SINGLE-SERVICE MANUFACTURING PLANT INSPECTION REPORT. (Refer to Appendix M.)

1. FLOORS

a. The floors of all fabricating areas shall be smooth, impervious, and maintained in a state of good repair. The floors of storage rooms may be constructed of tightly joined wood.

b. The joints between the walls and floor shall be tight, impervious and shall have coved or sealed joints.

c. Where floor drains are provided, they shall be properly trapped and floors sloped to drain.

2. WALLS AND CEILINGS

a. Walls and ceilings of fabricating areas shall have a smooth, cleanable, light-colored surface.

b. Walls and ceilings in fabricating and storage areas shall be kept in good repair.

c. The opening around pipes, tubes and similar items that extend through the walls and/or ceiling shall be effectively sealed.

3. DOORS AND WINDOWS

a. All outside openings shall be effectively protected against the entry of insects, rodents, dust and airborne contamination.

b. All outer doors shall be tight and self-closing.

4. LIGHTING AND VENTILATION

a. All rooms shall be adequately lighted either by natural light, artificial light, or both. A minimum of twenty (20) foot-candles (220 lux) should be maintained in fabricating areas and

five (5) foot-candles (55 lux) in storage areas. Packaging, sealing, wrapping, labeling and similar procedures are considered part of the fabricating area.

b. Ventilation shall be sufficient to prevent excessive odors and the formation of excessive water condensation.

c. The intake of all pressure ventilation systems in fabricating areas, whether they are positive or exhaust shall be properly filtered.

5. SEPARATE ROOMS

a. All fabricating areas shall be separate from non-fabricating areas to protect against contamination. Provided, that if the entire plant meets all sanitation requirements and no source of cross contamination exists, separation between areas is not required.

b. All regrinding of plastic and the shredding, packaging or baling of paper trim shall be conducted in rooms separate from the fabricating room, except that they may be conducted within the fabricating room, provided such operations are kept clean and free of dust.

6. TOILET FACILITIES - SEWAGE DISPOSAL

a. Disposal of sewage and other wastes shall be in a public sewage system or in a manner in compliance with Local and State regulations.

b. All plumbing shall comply with the Local and State plumbing regulations.

c. Toilet rooms shall have solid, tight-fitting doors that are self-closing.

d. The toilet room and fixtures shall be maintained in a clean and sanitary condition and kept in good repair.

e. Each toilet room shall be well lighted and adequately ventilated. Air ventilation ducts from toilet facilities shall vent to the outside.

f. Proper handwashing facilities with hot and cold and/or warm running water shall be provided in toilet rooms.

g. All windows shall be effectively screened when open.

h. Signs shall be posted in all toilet rooms reminding employees to wash their hands before returning to work.

i. Eating and/or storage of food are prohibited in toilet rooms.

7. WATER SUPPLY

a. The water supply, if from a public system, shall be approved as safe by the State Water Control Authority responsible for water quality, and in the case of individual water systems, comply with at least the specifications outlined in Appendix D. and the bacteriological standards outlined in Appendix G. of this *Ordinance***.**

b. There shall be no cross-connection between a safe water supply and any unsafe or questionable water supply or any source of pollution through which the safe water supply might become contaminated.

c. Samples for bacteriological testing of individual water supplies are taken upon the initial approval of the physical structure; each twelve (12) months thereafter; and when any repair or alteration of the water supply system has been made. The examination of the sample shall be conducted in an Officially Designated Laboratory.

d. Water baths utilizing recirculated water for cooling product-contact surfaces shall comply with the bacteriological standards outlined in Appendix G. of this *Ordinance* and shall be tested semi-annually.

e. Records of all required water tests shall be maintained at a location acceptable to the Rating/Regulatory Agency for a period of two (2) years.

8. HANDWASHING FACILITIES

a. Hot and cold and/or warm running water, soap, air dryers or individual sanitary towels shall be convenient to all fabricating areas. Provided, that solvent or soft soap dispensers, containing sanitizers, may be used if water is not available. When individual sanitary towels are used, covered trash containers shall be provided.

b. Handwashing facilities shall be kept clean.

9. PLANT CLEANLINESS

a. The floors, walls, ceilings, overhead beams, fixtures, pipes and ducts of production, storage, regrind, baling and compacting rooms shall be clean.

b. All production areas, warehouse, toilet, lunch and locker rooms shall be free of evidence of insects, rodents, and birds.

c. Machines and appurtenances shall be kept clean. Provided, that minor accumulations of paper, plastic or metal dust and other production soils incidental to normal fabricating operations do not violate this requirement.

10. LOCKER AND LUNCHROOMS

a. Locker and lunchrooms shall be separate from plant operations and be equipped with self-closing doors.

b. Eating and/or storage of food are prohibited in fabricating and storage areas.

c. Locker and lunchrooms shall be kept in a clean and sanitary condition.

d Cleanable refuse containers, properly labeled, shall be provided, which are covered, impervious, leak-proof and readily accessible.

e. Proper handwashing facilities shall be convenient to locker and lunchrooms.

f. Signs shall be posted reminding employees to wash their hands before returning to work.

11. DISPOSAL OF WASTES

a. All refuse and garbage shall be stored in covered, impervious and leak-proof containers. This requirement does not pertain to production scrap.

b. All waste containers shall be clearly labeled for their intended purpose and contents.

c. Where possible, garbage and assorted rubbish should be stored outside the building in covered, impervious, cleanable containers. If stored inside the building, it must be contained in similar receptacles, but in an area separate from fabricating areas.

12. PERSONNEL - PRACTICES

a. Hands shall be thoroughly washed before commencing plant functions and as often as may be required to remove soil and contamination, and before returning to work after visiting the toilet room or lunchroom.

b. All personnel shall wear clean outer garments and effective hair restraints.

c. No person affected with any disease in a communicable form, or while a carrier of such disease, and no person with an infected cut or lesion shall work in any processing area in any capacity where there is a likelihood of such person contaminating product or product-contact surfaces with pathogenic organisms. (Refer to Sections 13 and 14 of this *Ordinance*)

d. The use of tobacco products is prohibited in fabricating, regrind and storage areas.

e. Insecured jewelry shall not be permitted in fabricating areas.

13. PROTECTION FROM CONTAMINATION

a. All product-contact surfaces of containers, closures and all materials in process are covered or otherwise protected to prevent the access of insects, dust, condensation and other contamination.

b. Whenever air under pressure is directed at resin, regrind, colorants and similar materials or a product-contact surface, it shall be free of oil, dust, rust, excessive moisture, extraneous materials and odor and shall otherwise comply with the applicable requirements of Appendix H. of this *Ordinance.*

c. Air that is directed at product or product-contact surfaces by fans or blowers shall be filtered and shall otherwise comply with the applicable requirements of Appendix H. of this *Ordinance*.

d. Only pesticides approved for use in food plants and registered with the EPA shall be used for insect and rodent control.

e. Pesticides shall be used in accordance with the manufacturer's directions and used so as to preclude the contamination of containers or closures.

f. Single-service articles in process shall be protected from contamination by use of a single-service cover sheet or other protective device. This includes chipboard, dividers, separators, bags and other items that can become contact surfaces.

g. Single-service containers and closures for milk and milk products shall not be fabricated on equipment used for the manufacture of products made of non-food-grade materials, unless such equipment has been thoroughly cleaned and/or purged of all non-food-grade material by a process that will not contaminate the food-grade material.

h. The manufacture of single-service containers and closures for milk and milk products shall be carried on in such a manner that there will be no cross contamination of raw material or regrind with non-food-grade materials.

i. Equipment and operations are so located within the plant as to prevent overcrowding and allow for cleaning and maintenance procedures.

j. All toxic chemicals, including cleaning and maintenance compounds, shall be adequately segregated from raw materials and finished product.

k. Food containers manufactured by the facility shall not be used for storing miscellaneous items or chemicals.

14. STORAGE OF MATERIALS AND FINISHED PRODUCT

a. Blanks, roll stock and all other single-service containers, closures and articles shall be stored off the floor by use of pallets, slip-sheets or other methods and away from any wall a sufficient distance to facilitate inspection, cleaning and pest control activities. Any roll stock having dirty or soiled outer turns and/or edges shall have sufficient turns discarded prior to use and the edges trimmed to provide protection from contamination.

b. Appropriate clean, dry storage facilities shall be provided for single-service containers, closures, paper for wrapping, adhesives, blanks and other production material to provide protection from splash, insects, dust and other contamination.

c. Where containers and closures are pre-formed in plants other than the original fabricating facility:

(1) Containers, blanks and closures shall be stored in the original cartons and sealed until used; and

(2) Partially used cartons of containers, blanks and closures shall be resealed until used.

d. Containers used for the storage of resin and other raw materials, regrind, broke and trim, intended for use in the process, shall be covered, clean, impervious and properly identified. Reuse of storage containers, such as gaylords, is permitted provided single-use plastic liners are used.

e. In-process storage bins that touch the product-contact surface of containers or closures shall be constructed of cleanable, nonabsorbent material and kept clean.

15. FABRICATING EQUIPMENT

The requirements of this Section pertain to all equipment and processes used in the fabrication of containers and closures, irrespective of the materials used and whether or not mentioned herein. Some of this equipment includes grinders, rollers, reamers and cutters, molders and fittings, extruders, silos, resin bins and hoppers, printing equipment, blanking equipment and sealing equipment.

a. Rolls, dies, belts, tables, mandrels, transfer tubing and all other contact surfaces shall be kept clean, sanitary and reasonably free of accumulation of paper, plastic or metal dust and other production soils. Equipment designed for milk plant use, which is utilized for pre-forming containers, shall be clean and sanitized prior to operation.

b. Makeshift devices such as tape, rope, twine, paperboards, etc., shall not be used. All fasteners, guides, hangers, supports and baffles shall be constructed of impervious, cleanable materials and kept in good repair.

c. Take-off tables and other container contact surfaces shall be constructed of cleanable material, kept clean and in good repair.

d. All grinders, shredders and similar equipment used for regrinding shall be installed above the floor or installed in such a manner that they are protected, so that floor sweepings and other contaminants cannot enter the grinder or shredder.

e. Storage tanks, silos, gaylords or bins used for plastic resins shall be so constructed to protect the resin from contamination. All air vents shall be filtered to prevent the entrance of dust, dirt, or insects. Air tubes used to convey resin shall be in good repair and installed in such a manner that protects the resin from contamination. Air tubes used to convey resin shall have end caps, attached by a chain or cable that prevents contamination. This Item also applies to all raw materials handled in like manner.

16. MATERIALS FOR CONSTRUCTION OF CONTAINERS AND CLOSURES

a. Only plastic sheeting and extrusions, plastic laminated paper, roll stock, component part(s), molded or formed parts, metal and paperboard blanks, or combinations thereof, from a manufacturing and/or fabricating plant conforming to these Standards, shall be used. Fabricating plants listed in the current *IMS List* shall be considered in compliance with this Item.

b. Only food-grade, non-toxic lubricants shall be used on container or closure-contact surfaces. Excess lubricant shall be removed from surfaces close to shafts, rollers, bearing sleeves and mandrels. These lubricants shall be handled and stored in a manner that will prevent cross contamination with non-food-grade lubricants. Such storage areas shall be clean and adequately ventilated.

c. Containers, resin and flashing on the floor, floor sweepings of production materials and production scrap are prohibited from being reused. This shall not preclude the use of these materials when they comply with a recycling protocol that has been reviewed and accepted by FDA.

17. WAXES, ADHESIVES, SEALANTS, COATINGS AND INKS

a. Waxes, adhesives, sealants, coatings and inks used for containers and closures shall be handled and stored in a manner that will prevent cross contamination with similar non-food-grade materials. Such storage areas shall be clean and adequately ventilated.

b. Unused materials shall be covered, labeled and properly stored.

c. Waxes, adhesives, sealants, coatings and inks shall not impart odor or taste to the milk or milk products and shall not contaminate the product with microorganisms or toxic or injurious

substances. All materials that are applied to the product-contact surface shall comply with the requirements of 21 CFR Parts 175-178.

d. Transfer containers shall be kept clean and shall be properly identified and covered.

e. Waxing shall be performed so as to assure that containers or closures are completely coated and the wax shall be kept at a temperature of 60ºC (140ºF) or higher.

18. HANDLING OF CONTAINERS AND EQUIPMENT

a. Handling container and closure surfaces shall be kept to a minimum.

b. Handlers shall sanitize their hands frequently or wear clean, single-use gloves. Hand sanitizing dispensers, if used, shall be located convenient to all operations involving manual contact.

19. WRAPPING AND SHIPPING

a. Blanks, closures, halves, nested or pre-formed containers and parts such as valves, hoses, tubes and other fittings shall be properly packaged or containerized prior to shipping.

b. The outer package or containerized units shall protect the contents from dust and other contamination.

c. Transportation vehicles used to ship finished materials from the single-service container or closure plant or within the plant shall be clean and in good repair and shall not have been used for the transportation of garbage, waste or toxic materials.

d. Paperboard containers, wrappers, and dividers that contact the surface of the container or closure shall not be reused for this purpose.

e. All packaging materials that contact the product-contact surface of the container or closure shall comply with the requirements of 21 CFR Parts 175-178 and the bacteriological standards of Section C of these Standards, but the materials do not have to be manufactured at a listed single-service plant. Some outer packaging material such as corrugated cardboard boxes used for the packaging of milk carton flats, are exempt from this bacteriological standard. The edges of these flats are subject to heat during the forming and sealing of the container.

20. IDENTIFICATION AND RECORDS

a. Outer wrappings shall be identified with the name and city of the plant where the contents are fabricated, except those manufactured in, and which are only for use in the same facility. Where several plants are operated by one (1) firm, the common firm name may be utilized, provided that the location of the plant at which the contents were fabricated is also shown either directly or by the Federal Information Processing Standards (FIPS) numerical code on the outer wrapper.

b. Single-service glass containers must be labeled with wording to designate “single-service use only”.

c. Records of all required bacteriological tests of containers and closures shall be maintained at the plant of manufacture for two years and results shall be in compliance with Section C of these Standards.

d. It is the responsibility of the inspected/certified and listed plant to maintain records verifying the bacterial and chemical safety of all component parts utilized in the final assembled product.

e. The fabricating plant shall have on file information from suppliers of raw material, waxes, adhesives, sealants, coatings and inks indicating that the material complies with the requirements of 21 CFR Parts 175 - 178.

f. The fabricating plant shall have on file information from the suppliers of packaging materials specified in these Standards indicating that the material complies with the

requirements of 21 CFR Parts 175-178 and the bacteriological standards of Section C. of these Standards. There are no specifications for sampling frequency. The Regulatory Agency may choose to collect samples of packaging materials to determine compliance with bacteriological standards of this Section.

g. Multi-plant corporations may have all the required information at a central location as long as it can be transmitted to the site upon request.

21. SURROUNDINGS

a. Exterior surroundings shall be neat and clean and free from conditions that might attract or harbor flies, other insects and rodents.

b. Driveways, lanes and areas serving the plant vehicular traffic are graded, drained and free from pools of standing water.

E. CRITERIA FOR LISTING CERTIFIED SINGLE-SERVICE MANUFACTURERS IN THE *IMS LIST*

Historically, certification of manufacturers of single-service containers and related products has been for one (1) year. In addition, a 90-day grace period was provided for the transmission of the *Report of Certification* through the proper channels to Milk Safety Branch (HFS-626) to provide for the lag time for printing the in *IMS List*.

The following criteria have been developed to allow Rating and/or Regulatory Agencies flexibility in evaluating and listing single-service manufacturing plants.

Rating and/or Regulatory Agencies may choose from the following list of criteria for listing certified single-service manufacturers:

1. Single-service manufacturers that operate in conjunction with an IMS Listed milk plant may be listed for twenty-four (24) months, if the single-service plant is inspected at least quarterly, using Form FDA 2359c-MANUFACTURING PLANT INSPECTION REPORT, and records of such inspections and all required tests are maintained by the Regulatory Agency. Provided that, single-service manufacturers that operate in conjunction with an IMS HACCP listed milk plant may be listed for twenty-four (24) months, if the single-service plant is integrated into the milk plant's NCIMS HACCP system and if the single-service plant is inspected at the minimum milk plant audit frequency specified in Appendix K, using Form FDA 2359c-MANUFACTURING PLANT INSPECTION REPORT, and records of such inspections and all required tests are maintained by the Regulatory Agency. The permit for the milk plant shall also include the inspection of the single-service manufacturing areas.
2. Single-service manufacturers that operate in conjunction with an IMS Listed milk plant and are not inspected at least quarterly and/or are not included under a permit system may be optionally listed for twelve (12) months, plus a 90-day grace period after an evaluation.
3. Single-service manufacturers that operate as a separate entity may be listed for twenty-four (24) months, if the Regulatory Agency has a permit system and inspects the plant using Form FDA 2359c at least quarterly. All testing of containers and individual water supplies shall be under the direction of the Regulatory Agency and kept on file.
4. Single-service manufacturers that operate as a separate entity and are not inspected by Regulatory Agency personnel at least quarterly and/or do not have a permit system may be optionally listed for twelve (12) months, plus a 90-day grace period, after an evaluation.

The following procedures shall be followed for listing certified single-service manufacturers in the *IMS List*:

1. Triplicate copies or PHS/FDA's electronic version (transmitted via computer) of FORM FDA 2359d–REPORT OF CERTIFICATION (*Fabrication of Single-Service Containers and Closures for Milk and Milk Products)* shall be submitted by the State Rating Officer to the appropriate Regional Office of the PHS/FDA for single-service manufacturers who desire to be listed in the *IMS List*.
2. For foreign firms, duplicate copies or PHS/FDA's electronic version (transmitted via computer) of FORM FDA 2359d–REPORT OF CERTIFICATION (*Fabrication of Single-Service Containers and Closures for Milk and Milk Products)* shall be submitted by the private consultant conducting the certification to CFSAN's Milk Safety Branch (HFS-626), Food and Drug Administration, 5100 Paint Branch Parkway, College Park, MD 20740-3835 for single-service manufacturers who desire to be listed in the *IMS List*.
3. The Certified Single-Service Manufacturer is not listed in the *IMS List* unless the "PERMISSION TO PUBLISH" SECTION of FORM FDA 2359d is signed by an officer of the firm authorizing the release.
   a. For the submission of PHS/FDA's electronic version, a signed copy of FORM FDA 2359d, including Section 12, shall be maintained on file by the Rating Agency and will be reviewed as part of the Single-Service Listing Audit and/or the State Program Evaluation.
   b. For the submission of PHS/FDA's electronic version, a signed copy of FORM FDA 2359d, including Section 12, shall be maintained on file by the private consulting firm.

APPENDIX K. HACCP PROGRAM

I. THE HACCP SYSTEM INTRODUCTION

HISTORY OF HACCP: The use of the HACCP System is not new to the dairy industry. HACCP is a logical, simple, effective, but highly structured system of food safety control.

The HACCP System was introduced to the food industry as a spin-off of the space program during the 1960's. The National Aeronautics and Space Administration (NASA) used HACCP to provide assurance of the highest quality available for components of space vehicles. This program, to develop assurance of product reliability, was carried over into the development of foods for astronauts.

The U.S. Army Natick Laboratories, in conjunction with NASA, began to develop the foods needed for manned space exploration. They contracted with the Pillsbury Company to design and produce the first foods used in space. While Pillsbury struggled with certain problems, such as how to keep food from crumbling in zero gravity, they also undertook the task to come as close as possible to 100% assurance that the foods they produced would be free of bacterial or viral pathogens.

Using traditional quality control methods for the food industry was soon proven to be unworkable for the task Pillsbury had undertaken. The degree of safety desired was not provided by the current programs, and the product sampling necessary to provide an adequate degree of safety would have been prohibitive to commercialization of space foods. Pillsbury discarded its standard quality control methods and began an extensive evaluation, in conjunction with NASA and Natick Labs, to evaluate food safety. They soon realized that to be successful they would have to have control over their process, raw materials, environment, and their people. In 1971, they introduced HACCP as a preventive system that enables manufacturers to produce foods with a high degree of assurance that the foods were produced safely.

BACKGROUND: HACCP is a management tool that provides a structured and scientific approach to the control of identified hazards. HACCP is a logical basis for better decision-making with respect to product safety. HACCP has international recognition as an effective means of controlling food safety hazards and is endorsed as such by the joint Food and Agriculture Organization of the World Health Organization (FAO)/World Health Organization (WHO) Codex Alimentarius Commission. The U.S. National Advisory Committee on Microbiological Criteria for Foods (NACMCF) has also endorsed it.

The HACCP concept will enable those operating under and regulating under a HACCP Plan to move to a preventive approach, whereby potential hazards are identified and controlled in the manufacturing environment, i.e., prevention of product failure. HACCP allows for a preventive, systematic approach to food safety.

VOLUNTARY PARTICIPATION: This Appendix describes a voluntary, NCIMS HACCP Program alternative to the traditional inspection system. No milk plant, receiving station or transfer station may participate in the voluntary NCIMS HACCP Program unless the Regulatory Agency responsible for the oversight of the facility agrees to participate with the dairy plant(s), receiving station(s) and transfer station(s) in the NCIMS HACCP Program. Both parties must provide written commitment to each other that the necessary resources to support participation in the NCIMS HACCP Program will be made available. Management responsible for both the

State and dairy plant, receiving station or transfer station must be willing to provide the resources needed to develop and implement a successful HACCP System.

HACCP PRINCIPLES: Following are the seven (7) HACCP principles to be included in a HACCP Plan:

1. Conduct a hazard analysis;
2. Determine the critical control points;
3. Establish critical limits;
4. Establish monitoring procedures;
5. Establish corrective actions;
6. Establish verification procedures; and
7. Establish record-keeping and documentation procedures.

PREREQUISITE PROGRAMS (PPs): Prior to the implementation of a HACCP Plan, there is a requirement for dairy plants, receiving stations and transfer stations to develop, document and implement written PPs. PPs provide the basic environment and operating conditions that are necessary for the production of safe, wholesome food. Many of the conditions and practices are specified in Federal and State regulations and guidelines.
PPs, and the HACCP System in total, address public health concerns such as those identified in 21 CFR Part 7, Recalls; Part 110, Good Manufacturing Practices (GMPs); Part 113, Thermally Processed Low-Acid Foods Packaged in Hermetically Sealed Containers; Part 131, Milk and Cream; the *Grade "A" PMO*; and the current edition of the NACMCF HACCP Principles and Application Guidelines.

SUMMARY: The seven (7) principles of HACCP are also called the HACCP Plan. When combined with the PPs, they constitute a HACCP System. The NCIMS HACCP Program described in this Appendix includes the HACCP System and other prescribed *Grade "A" PMO* criteria, such as drug residue testing and traceback; use of milk only from supplies that have been awarded a milk sanitation compliance rating of 90% or better or from an acceptable IMS HACCP listed source; and the labeling requirements of Section 4. When properly implemented, the HACCP program described in this Appendix will provide assurance of milk and milk product safety that is equivalent to that provided under the traditional inspection system.

II. IMPLEMENTATION OF A HACCP SYSTEM

PRELIMINARY STEPS: Preliminary steps as listed in the NACMCF document should be followed when producing a HACCP Plan. Complete, up-to-date process flow diagrams are required for all milk and milk products manufactured. Flow diagrams may be combined when processes, products and hazards are similar.

PREREQUISITE PROGRAM: HACCP is not a stand-alone program, but is part of a larger control system. PPs are the universal procedures used to control the conditions of the milk plant environment that contribute to the overall safety of the milk or milk product. They represent the sum of programs, practices and procedures that must be applied to produce and distribute safe milk and milk products in a clean, sanitary environment. They differ from CCPs in that they are

basic sanitation programs that reduce the potential occurrence of a milk or milk product safety hazard. Frequently, both HACCP Plan CCPs and PPs control measures are necessary to control a food safety hazard.

HACCP may be implemented only in a facility that is constructed and operated to provide a sanitary environment. Milk plant, receiving station or transfer station premises, building construction, maintenance, and housekeeping shall be maintained in a manner sufficient to provide such an environment. These factors shall be controlled by effective milk plant, receiving station or transfer station programs or by PPs, as the milk plant, receiving station or transfer station chooses.

The exact set of PPs will vary since their application is milk or milk product and process specific. The existence and effectiveness of PPs should be assessed during the design and implementation of each HACCP Plan. PPs should be documented and regularly audited. An audit review consists of verifying that the company has a program implemented that indicates how the company monitors and controls each of the PPs. PPs are established and managed separately from the HACCP Plan.

1. **Required PPs:** The following required PPs shall have a **brief written description or checklist** that the PPs can be audited against to ensure compliance. PPs shall include procedures that can be monitored; records that specify what is monitored; and how often it will be monitored.

Each milk plant, receiving station or transfer station shall have and implement PPs that address conditions and practices before, during, and after processing. The PPs shall address:

a. Safety of the water that comes into contact with milk or milk products or product-contact surfaces, including steam and ice;
b. Condition and cleanliness of equipment product-contact surface;
c. Prevention of cross-contamination from insanitary objects and or practices to milk or milk products or product-contact surfaces, packaging material and other food-contact surfaces, including utensils, gloves, outer garments, etc., and from raw product to processed product;
d. Maintenance of handwashing, hand sanitizing, and toilet facilities;
e. Protection of milk or milk product, packaging material, and product-contact surfaces from adulteration with lubricants, fuel, pesticides, cleaning compounds, sanitizing agents, condensate and other chemical, physical and biological contaminants;
f. Proper labeling, storage, and use of toxic compounds;
g. Control of employee health conditions, including employee exposure to high risk situations, that could result in the microbiological contamination of milk or milk products, packaging materials, and product-contact surfaces; and
h. Pest exclusion from the milk plant.

In addition to the required PPs specified above, any other PPs that are being relied upon in the Hazard Analysis to reduce the likelihood of hazards such that they are not reasonably likely to occur, shall also be monitored, audited, and documented as required PPs.

2. **Monitoring and Correction:** The milk plant, receiving station or transfer station shall monitor the conditions and practices of all required PPs with sufficient frequency to ensure conformance with those conditions and that are appropriate both to the milk plant, receiving station or transfer station and to the safety of the milk or milk product being processed. Each

milk plant, receiving station or transfer station shall document the correction of those conditions and practices that are not in conformance. Devices, such as indicating and recording thermometers that are used to monitor PPs shall be calibrated to assure accuracy at a frequency determined by the milk plant, receiving station, or transfer station.

3. **Required Records:** Each milk plant, receiving station or transfer station shall maintain records that document the monitoring and corrections required by this Appendix. These records are subject to the record keeping requirements of this Appendix.

HAZARD ANALYSIS: Each milk plant, receiving station or transfer station shall develop, or have developed for it, a **written hazard analysis** to determine whether there are milk or milk product hazards that are reasonably likely to occur for each type of milk or milk product processed or handled by the milk plant, receiving station or transfer station and to identify the control measures that the milk plant, receiving station or transfer station can apply to control those hazards.

The hazard analysis shall include hazards that can be introduced both within and outside the milk plant, receiving station or transfer station environment, including hazards that can occur during handling, transportation, processing and distribution.

A hazard that is reasonably likely to occur is one for which a prudent milk plant, receiving station or transfer station operator would establish controls because experience, illness data, scientific reports, or other information provide a basis to conclude that there is a reasonable possibility that, in the absence of these controls, the hazard will occur in the particular type of milk or milk product being processed. The hazard analysis shall be developed by an individual(s) trained in accordance with this Appendix and shall be subject to the record keeping requirements as described in this Appendix.

1. In evaluating what milk or milk product hazards are reasonably likely to occur, at a minimum, consideration should be given to the following:
   a. Microbiological contamination;
   b. Parasites;
   c. Chemical contamination;
   d. Unlawful drug and pesticide residues;
   e. Natural toxins;
   f. Unapproved use of food or color additives;
   g. Presence of undeclared ingredients that may be allergens; and
   h. Physical hazards.

2. Milk plant, receiving station or transfer station operators should evaluate product ingredients, processing procedures, packaging, storage, and intended use; facility and equipment function and design; and milk plant sanitation, including employee hygiene, to determine the potential effect of each on the safety of the finished milk or milk product for the intended consumer.

HACCP PLAN:

1. **HACCP Plan:** Every milk plant, receiving station or transfer station shall have and implement a written HACCP Plan whenever a hazard analysis reveals one (1) or more hazards that are reasonably likely to occur. The HACCP Plan shall be developed by an individual(s) who has been trained and shall be subject to record keeping requirements in accordance with this

Appendix. A HACCP Plan shall be specific to each location and milk or milk product. The plan may group similar types of milk and milk products together, or similar types of production methods together, if the hazards, CCPs, CLs, and procedures required to be identified and performed by 2. of this Section are essentially identical, provided that any required features of the plan that are unique to a specific milk or milk product or method are clearly delineated in the plan and are observed in practice.

2. **Contents of the HACCP Plan:** The HACCP Plan shall, at a minimum:
   a. Include complete up-to-date process flow diagrams for all milk and milk products manufactured. Flow diagrams may be combined when processes, milk and milk products and hazards are similar.
   b. List all hazards that are reasonably likely to occur as identified in the hazard analysis specified above, and that must be controlled for each type of milk or milk product.
   c. List the CCPs for each of the identified hazards, including the appropriate:
      (1) CCPs designed to control hazards that could occur or could be introduced in the milk plant, receiving station or transfer station environment;
      (2) CCPs designed to control hazards introduced outside the milk plant, receiving station or transfer station environment, including hazards that occur before arriving at the milk plant, receiving station and/or transfer station; and
      (3) List the CLs that shall be met at each of the CCPs.
   d. List the procedures and the frequency with which they are to be performed that will be used to monitor each of the CCPs to ensure compliance with the CLs;
   e. Include any corrective action plans that have been developed in accordance with the corrective action requirements as described in this Appendix, and that are to be followed in response to deviations from CLs at CCPs;
   f. List the verification and validation procedures, and the frequency with which they are to be performed, that the milk plant, receiving station or transfer station will use in accordance with verification and validation requirements as described in this Appendix; and
   g. Provide a record keeping system that documents the monitoring of the CCPs in accordance with the record requirements as described in this Appendix. The records shall contain the actual values and observations obtained during monitoring.

3. **Sanitation:** Sanitation controls may be included in the HACCP Plan. However, to the extent that they are monitored in accordance with the PPs, they need not be included in the HACCP Plan.

CORRECTIVE ACTIONS: Whenever a deviation from a CL occurs, a milk plant, receiving station or transfer station shall take corrective action by following the procedures set forth in 1. or 2. of this Section.

1. Milk plants, receiving stations or transfer stations may develop written corrective action plans, which become a part of their HACCP Plan(s), in accordance with this Appendix. These corrective action plans may predetermine the corrective actions that milk plants, receiving stations and transfer stations will take whenever there is a deviation from a CL. A corrective action plan that is appropriate for a particular deviation is one (1) that describes the steps to be taken and assigns responsibility for taking those steps, to ensure that:
   a. No milk or milk product is allowed to enter commerce that is either injurious to health or is otherwise adulterated as a result of the deviation; or

b. If such milk or milk product has entered commerce, it is expeditiously removed; and
c. The cause of the deviation is corrected.

2. When a deviation from a CL occurs, and the milk plant, receiving station or transfer station does not have a corrective action plan that is appropriate for that deviation, the milk plant, receiving station or transfer station shall:

a. Segregate and hold the affected milk or milk product, at least until the requirements of paragraphs 2.b and 2.c of this Section are met;

b. Perform or obtain a review to determine the acceptability of the affected milk or milk product for distribution. The review shall be performed by an individual or individuals qualified by training or experience to perform such a review;

c. Take corrective action, when necessary, with respect to the affected milk or milk product to ensure that no milk or milk product is allowed to enter commerce that is either injurious to health or is otherwise adulterated as a result of the deviation;

d. Take corrective action, when necessary, to correct the cause of the deviation; and

e. Perform or obtain timely validation by a qualified individual(s), as required in this Appendix, to determine whether modification of the HACCP Plan is required to reduce the risk of recurrence of the deviation, and modify the HACCP Plan as necessary.

3. All corrective actions taken in accordance with this Section shall be fully documented in records that are subject to verification.

VERIFICATION AND VALIDATION:

1. **Verification:** Every milk plant, receiving station or transfer station shall verify that the HACCP System is being implemented according to design, except that critical factors for aseptically processed Grade "A" milk and milk products, as determined by the process authority and listed on the scheduled process under 21 CFR 113 shall be managed separately from the NCIMS HACCP System, even if identified as a CCP in the hazard analysis. Critical factors shall be monitored under the operating supervision of an individual who has successfully completed an approved course of instruction in low-acid canned foods as required under 21 CFR 108.35. Compliance with the provisions of 21 CFR 113 shall satisfy the requirements of this Section, regardless of whether a critical factor has also been designated as a CCP.

a. Verification activities shall include:

(1) The calibration of CCP process-monitoring instruments, i.e., pasteurization tests, etc.;

(2) At the option of the milk plant, receiving station or transfer station, the performance of periodic end-product or in-process testing;

(3) A review, including signing and dating, by an individual who has been trained in accordance with the training requirements of this Appendix, of the records that document:

i) The Monitoring of CCPs: The purpose of this review shall be, at a minimum, to ensure that the records are complete and to verify that the recorded document values are within the CLs. This review shall occur at a frequency that is appropriate to the importance of the record and as specified in the HACCP Plan;

ii) The Taking of Corrective Action: The purpose of this review shall be, at a minimum, to ensure that the records are complete and to verify that appropriate corrective action(s) was taken in accordance with the corrective action requirements cited before. This review shall occur at a frequency that is appropriate to the importance of the record. A centralized deviation log is required; and

iii) The calibrating of any process monitoring instruments used at CCPs and the performance of any periodic end-product or in-process testing that is part of the milk plant, receiving station or transfer station's verification activities.

The purpose of these reviews shall be, at a minimum, to ensure that the records are complete and that these activities occurred in accordance with the milk plant's, receiving station's or transfer station's written procedures. These reviews shall occur within a reasonable time after the records are made.

(4) The taking of corrective action procedures whenever any verification procedure establishes the need to take a corrective action.

b. The calibration of CCP process-monitoring instruments, and the performance of any periodic end-product and in-process testing, in accordance with 1.a.(3)ii) and 1.a.(3)iii) of this Section, shall be documented in records that are subject to the record keeping requirements in this Appendix.

2. **Validation of the HACCP Plan**: Every milk plant, receiving station or transfer station shall validate that the HACCP Plan is adequate to control hazards that are reasonably likely to occur. This validation shall occur at least once within twelve (12) months after implementation and at least annually thereafter or whenever any changes in the process occur that could affect the hazard analysis or alter the HACCP Plan. Such changes may include changes in the following:

a. Raw materials or source of raw materials; product formulation; processing methods or systems, including computers and their software; packaging; finished product distribution systems; or the intended use or intended consumers of the finished product and consumer complaints.

The validation shall be performed by a qualified individual(s) trained in accordance with the requirements described in this Appendix and shall be subject to the record keeping requirements cited below. The HACCP Plan shall be modified immediately whenever a validation reveals that the plan is no longer adequate to fully meet the requirements of this document.

3. **Validation of the Hazard Analysis:** Whenever a milk plant, receiving station or transfer station does not have a HACCP Plan, because a hazard analysis has revealed no hazards that are reasonably likely to occur, the milk plant, receiving station or transfer station shall reassess the adequacy of the hazard analysis whenever there are any changes in the process that could reasonably affect whether a hazard exists. Such changes may include changes in the following:

a. Raw materials or source of raw materials;
b. Product formulation;
c. Processing methods or systems, including computers and their software;
d. Packaging;
e. Finished product distribution systems; or
f. The intended use or intended consumers of the finished product; and
g. Consumer complaints.

A qualified individual(s) trained in accordance with the training requirements of this Appendix shall perform the validation.

RECORDS:

1. **Required Records:** It is essential that milk plants, receiving stations and transfer stations use consistent terminology to identify each piece of equipment, record, document, or other program throughout their written HACCP System. A milk plant, receiving station or transfer

station shall maintain the following records documenting the milk plant, receiving station or transfer station's HACCP System:

a. Records documenting the ongoing application of the PP, including a brief written description, monitoring and correction records;

b. The written hazard analysis;

c. The written HACCP Plan;

d. Required HACCP documents and forms specified in 1.a. through c. of this Section shall be dated or identified with a version number. Each page shall be marked with a new date or version number whenever that page is updated;

e. A Table of Contents and centralized list of the HACCP program records, by title, documenting the ongoing application of the HACCP System shall be maintained and provided for review;

f. A document change log;

g. Records documenting the ongoing application of the HACCP Plan that include:

(1) Monitoring of CCPs and their CLs, including the recording of actual times, temperatures, or other measurements, as prescribed in the milk plant's, receiving station's or transfer station's HACCP Plan;

(2) Corrective actions, including all actions taken in response to a deviation;

(3) A centralized deviation log is required; and

(4) Plan validation dates.

h. Records documenting verification and validation of the HACCP System, including the HACCP Plan, hazard analysis and PPs.

2. **General Requirements:** Records required by this Section shall include:

a. The identity and location of the milk plant, receiving station or transfer station;

b. The date and time of the activity that the record reflects;

c. The signature or initials of the person(s) performing the operation or creating the record; and

d. Where appropriate, the identity of the milk or milk product and the production code, if any. Processing and other information shall be entered on records at the time that it is observed. The records shall contain the actual values and observations obtained during monitoring.

3. **Documentation:**

a. The records in paragraphs 1.a. through c. of this Section shall be signed and dated by the most responsible individual onsite at the milk plant, receiving station or transfer station. This signature shall signify that these records have been accepted by the firm.

b. The records in paragraphs 1.a. through c. of this Section shall be signed and dated:

(1) Upon initial acceptance;

(2) Upon any modification; and

(3) Upon verification and validation in accordance with the requirements cited above.

4. **Record Retention:**

a. All records, required by this Section, shall be retained at the milk plant, receiving station or transfer station for perishable or refrigerated products, for at least one (1) year after the date that such products were prepared, and in the case of frozen, preserved, or shelf-stable products, for two (2) years after the date that the products were prepared or the shelf-life of the product, whichever is greater, unless longer retention time is required by other regulations.

b. Records that relate to the adequacy of equipment or processes used, such as commissioning or process validation records, including the results of scientific studies and evaluations, shall be retained at the milk plant, receiving station or transfer station facility for at least two (2) years after the date that the milk plant, receiving station or transfer station last used such equipment or process.

c. Off-site storage of processing records is permitted after six (6) months following the date that the monitoring occurred, if such records can be retrieved and provided on-site within twenty-four (24) hours of a request for official review. Electronic records are considered to be on-site if they are accessible from an on-site location.

d. If the processing facility is closed for a prolonged period, the records may be transferred to some other reasonably accessible location(s) but shall be immediately returned to the processing facility for official review upon request.

5. **Official Review:** All records required by this Section shall be available for official review at reasonable times.

6. **Records Maintained on Computers:** The maintenance of records on computers, in accordance with the requirements cited above, is acceptable.

III. EMPLOYEE EDUCATION AND TRAINING

The success of a HACCP system depends on educating and training management and employees in the importance for their role in producing safe milk and milk products. This should also include information in the control of milk borne hazards related to all stages of dairy production and processing. Specific training activities should include working instructions and procedures that outline the tasks of employees monitoring specific CCPs and PPs.

IV. TRAINING AND STANDARDIZATION

HACCP training for industry and regulatory personnel will be based on the current "Hazard Analysis and Critical Control Point Principles and Application Guidelines" of NACMCF, the current FDA HACCP recommendations, and the regulatory requirements of this Appendix and related Sections of this *Ordinance*.

Regulatory Agency personnel responsible for the evaluation, licensing and regulatory audits of facilities using the NCIMS HACCP Program will have equivalent training to the training required to perform traditional NCIMS functions. They shall also have specialized training in conducting HACCP System audits.

Industry, State and Federal regulatory and listing personnel should be trained together.

HACCP TRAINING:

1. **Core Curriculum:** The Dairy HACCP Core Curriculum consists of:
   a. Basic HACCP training; plus
   b. An orientation to the requirements of the NCIMS HACCP Program.

Basic HACCP training consists of instruction in the application of the NACMCF Principles of HACCP to Food Safety. This training includes practical exercises in conducting a hazard analysis and evaluating potential hazards; in writing a HACCP Plan; and in the validation of the

plan. It should be taught by experienced instructors.
The orientation component ideally is coupled with the basic HACCP training, but can be taught separately. The content of the orientation will be conducted under the guidance of the NCIMS. It is intended to familiarize industry and regulatory personnel with specific dairy HACCP concerns and the regulatory requirements under the NCIMS HACCP Program. It is to be taught by instructors experienced in the application of HACCP under the NCIMS HACCP Program.
The industry individual(s) performing the functions listed in Part 2 of this Section shall have successfully completed appropriate training in the application of HACCP principles to milk and milk product processing at least equivalent to that received under the Dairy HACCP Core Curriculum. Alternatively, job experience may qualify an individual to perform these functions if the experience has provided knowledge at least equivalent to that provided through the standardized curriculum.

2. **Industry Personnel:** Only industry individuals who have met the requirements of Part 1 of this Section shall be responsible for the following functions:
   a. Developing the hazard analysis, including delineating control measures, as required;
   b. Developing a HACCP Plan that is appropriate for the specific milk plant, receiving station or transfer station, in order to meet these requirements;
   c. Validating and modifying the HACCP Plan in accordance with the corrective action procedures and the validation activities as specified; and
   d. Performing required HACCP Plan records reviews.

3. **Regulatory Personnel:** Regulatory personnel performing HACCP audits shall have successfully completed appropriate training in the application of HACCP principles for milk and milk product processing at least equivalent to that received under the Dairy HACCP Core Curriculum.

V. HACCP AUDITS AND FOLLOW-UP ACTIONS

STATE REGULATORY AUDITS, ENFORCEMENT AUDITS, ACTIONS AND FOLLOW-UP: Audits shall be conducted of the milk plant, receiving station, or transfer station facility, and NCIMS HACCP Program to ensure compliance with the HACCP System and other associated NCIMS regulatory requirements.
The audit may be announced at the discretion of the auditor under certain circumstances, i.e., initial audit, follow-up audit, new construction, pasteurizer checks, etc. When unannounced audits are conducted, the audits shall not be completed until appropriate milk plant personnel have had an opportunity to make all pertinent records available for review by the auditor.

AUDITING PROCEDURES:

1. Pre-Audit Management Interview: Review and discuss the milk plant HACCP System including:
   a. Changes in the management structure;
   b. The Hazard Analysis - Ensure that all milk or milk product hazards are addressed;
   c. Changes in the HACCP Plan;
   d. Changes in the PPs;

e. Changes in the flow diagram; and
f. Changes in milk or milk products or processes.

2. Review past Audit Reports (AR) and corrections of deficiencies and non-conformities, if any;
3. In-milk plant review of the implementation and verification of the HACCP System;
4. Review records of the HACCP System;
5. Review compliance with other applicable NCIMS regulatory requirements*;
6. Discuss findings and observations;
7. Prepare and issue an AR based on findings of deficiencies and non-conformities. The AR shall include timelines for the correction of all identified deficiencies and non-conformities; and
8. Conduct the exit interview.

***NOTE:** Examples of Other Applicable NCIMS Requirements:

1. Raw Milk Supply Source;
2. Labeling Compliance;
3. Adulteration;
4. Licensing Requirements;
5. Drug Residue Testing and Traceback Requirements;
6. Regulatory Samples in Compliance;
7. Approved Laboratory Utilized for the Required Regulatory Tests; and
8. Pasteurization Equipment Design and Installation.

STATE REGULATORY ENFORCEMENT ACTION/FOLLOW-UP: The State Regulatory Agency shall:

1. Prepare and issue ARs based on findings of deficiencies and non-conformities and other NCIMS requirements;
2. Review the AR with the milk plant and establish time lines for the correction of all identified deficiencies and non-conformities and other NCIMS requirements;
3. Follow-up to ensure corrections are made as a result of the issuance of the AR;
4. Take immediate action when an imminent health hazard is observed to prevent further movement of milk and milk products until such hazards have been eliminated; and
5. Initiate regulatory enforcement action, such as permit suspension, revocation, hearings, court actions, and/or other equivalent measures when the milk plant, receiving station or transfer station has failed to recognize or correct a deficiency(ies) or nonconformity(ies).

AUDIT TIMEFRAMES:

Audits	Frequency Minimums
First Year after Initial Regulatory Audit	Initial audit; Next audit in thirty (30) to forty-five (45) days; and four (4) month intervals thereafter, unless the Regulatory Agency determines that a greater frequency is warranted.
Subsequent Audits	Every six (6) months unless the Regulatory Agency determines that a greater frequency is warranted*.
Compliance Follow-Ups	Compliance follow-ups shall be made as frequently as necessary to assure that problems observed by the Regulatory Agency have been resolved.

*The Regulatory Agency may elect to extend the minimum audit frequency from four (4) to six (6) months as long as the following conditions exist:

1. Item 12b of the MILK PLANT, RECEIVING STATION OR TRANSFER STATION NCIMS HACCP SYSTEM AUDIT REPORT is not marked on the regulatory audit for the current HACCP audit;
2. No current two (2) out of four (4) warning letter(s) or three (3) out of five (5) violation letter(s) for finished milk or milk product, or violative water sample results; and
3. No CLEs on the current or prior audit.

AUDIT REPORT FORM:

Refer to Appendix M. of this *Ordinance*.

APPENDIX L. APPLICABLE REGULATIONS, STANDARDS OF IDENTITY FOR MILK AND MILK PRODUCTS AND THE *FEDERAL FOOD, DRUG, AND COSMETIC ACT*

7 CFR 58.334 Pasteurization
7 CFR 58.2601 Whey
7 CFR 58.2651 Dry Buttermilk and Dry Buttermilk Product
21 CFR PART 11 - ELECTRONIC RECORDS; ELECTRONIC SIGNATURES
21 CFR PART 101 - FOOD LABELING
21 CFR PART 108 - EMERGENCY PERMIT CONTROL
21 CFR PART 110 - CURRENT GOOD MANUFACTURING PRACTICE IN MANUFACTURING, PACKING, OR HOLDING HUMAN FOOD
21 CFR PART 113 - THERMALLY PROCESSED LOW-ACID FOODS PACKAGED IN HERMETICALLY SEALED CONTAINERS
21 CFR PART 130.10 - Requirements for foods named by use of a nutrient content claim and a standardized term
21 CFR 131.3 Definitions - Cream, Pasteurized and Ultra-pasteurized
21 CFR 131.110 Milk
21 CFR 131.111 Acidified Milk
21 CFR 131.112 Cultured Milk
21 CFR 131.115 Concentrated Milk
21 CFR 131.120 Sweetened Condensed Milk
21 CFR 131.123 Lowfat Dry Milk
21 CFR 131.125 Nonfat Dry Milk
21 CFR 131.127 Nonfat Dry Milk fortified with vitamins A and D
21 CFR 131.147 Dry Whole Milk
21 CFR 131.149 Dry Cream
21 CFR 131.150 Heavy Cream
21 CFR 131.155 Light Cream
21 CFR 131.157 Light Whipping Cream
21 CFR 131.160 Sour Cream
21 CFR 131.162 Acidified Sour Cream
21 CFR 131.170 Eggnog
21 CFR 131.180 Half-and-Half
21 CFR 131.200 Yogurt
21 CFR 131.203 Lowfat Yogurt
21 CFR 131.206 Nonfat Yogurt
21 CFR 133.128 Cottage Cheese
21 CFR 133.129 Dry Curd Cottage Cheese
21 CFR 173.310 Boiler Water Additives
21 CFR 184.1979 Whey
21 CFR 184.1979(2) Concentrated Whey
21 CFR 184.1979(3) Dried or Dry Whey
21 CFR 184.1979a Reduced Lactose Whey
21 CFR 184.1979b Reduced Minerals Whey
21 CFR 184.1979c Whey Protein Concentrate
21 CFR 1240.61 Mandatory Pasteurization for All Milk and Milk Products in Final Package Form Intended for Direct Human Consumption
FFD&CA, as amended, Sec. 402. [342] Adulterated Food and Sec. 403. [343] Misbranded Food

APPENDIX M. REPORTS AND RECORDS

The following forms are available at:

http://www.fda.gov/opacom/morechoices/fdaforms/cfsan.html

FORM FDA 2359	MILK PLANT INSPECTION REPORT
FORM FDA 2359a	DAIRY FARM INSPECTION REPORT
FORM FDA 2359b	MILK PLANT EQUIPMENT TEST REPORT
FORM FDA 2359c	SINGLE-SERVICE MANUFACTURING PLANT INSPECTION REPORT
FORM FDA 2359g	CONDENSED AND DRY MILK & WHEY PLANT INSPECTION REPORT
FORM FDA 2399	MILK SAMPLE COLLECTOR EVALUATION FORM
FORM FDA 2399a	MILK TANK TRUCK, HAULER REPORT AND SAMPLER EVALUATION FORM
FORM FDA 2399b	MILK TANK TRUCK INSPECTION FORM

MILK PLANT, RECEIVING STATION OR TRANSFER STATION NCIMS HACCP SYSTEM AUDIT REPORT FORM

APPENDIX N. DRUG RESIDUE TESTING AND FARM SURVEILLANCE

I. INDUSTRY RESPONSIBILITIES

MONITORING AND SURVEILLANCE:

Industry shall screen all bulk milk pickup tankers, regardless of final use, for Beta lactam drug residues. Additionally, other drug residues shall be screened for by employing a random sampling program on bulk milk pickup tankers. The random bulk milk pickup tanker sampling program shall represent and include, during any consecutive six (6) months, at least four (4) samples collected in at least four (4) separate months, except when three (3) months show a month containing two (2) sampling dates separated by at least twenty (20) days. Samples collected under this random sampling program shall be analyzed as specified by FDA. (Refer to Section 6 of this *Ordinance*)

The bulk milk pickup tanker shall be sampled after the last producer has been picked up and before any additional commingling. The sample must be representative. Bulk milk pickup tanker testing shall be completed prior to processing the milk. Industry plant samplers shall be evaluated according to the requirements specified in Section 6. THE EXAMINATION OF MILK AND MILK PRODUCTS and at the frequency addressed in Section 5. INSPECTION OF DAIRY FARMS AND MILK PLANTS of this *Ordinance*. Bulk milk pickup tanker samples found to be positive for drug residues shall be retained as determined necessary by the Regulatory Agency. All presumptive positive test results for drug residues from analysis done on commingled raw milk tanks, bulk milk pickup tankers, farm raw milk tanks (only milk offered for sale) or finished milk or milk product samples must be reported to the Regulatory Agency of the State in which the testing was conducted.

REPORTING AND FARM TRACEBACK:

When a bulk milk pickup tanker is found to be positive for drug residues, the Regulatory Agency of the State in which the testing was conducted, shall be immediately notified of the results and the ultimate disposition of the raw milk.

The producer samples from the bulk milk pickup tanker, found to be positive for drug residues, shall be individually tested to determine the farm of origin. The samples shall be tested as directed by the Regulatory Agency.

Further pickups of the violative individual producer's milk shall be immediately discontinued, until such time, that subsequent tests are no longer positive for drug residues.

RECORD REQUIREMENTS:

Results of all testing may be recorded in any format acceptable to the Regulatory Agency that includes at least the following information:

1. Identity of the person doing the test;
2. Identity of the bulk milk pickup tanker being tested*;

3. Date/time the test was performed (Time, Day, Month and Year);
4. Identity of the test performed/lot #/any and all controls (+/-);
5. Results of the test;
6. Follow-up testing if initial test was positive/any and all controls (+/-);
7. Site where test was performed, and
8. Prior test documentation shall be provided for a presumptive positive load.

*Include the BTU number(s) of the farms present on the bulk milk pickup tanker with the above information.

Records of all sample results shall be maintained for a minimum of six (6) months by the industry at the location where the tests were run, and/or another location as directed by the Regulatory Agency.

II. REGULATORY AGENCY RESPONSIBILITIES

Upon receipt of notification from industry of a bulk milk pickup tanker, which contains milk from another State(s), is found to be presumptive positive for drug residues it is the responsibility of the Regulatory Agency of the receiving State to notify the Regulatory Agency(ies) of all States of origin.

MONITORING AND SURVEILLANCE:

Regulatory Agencies shall monitor industry surveillance activities during either routine or unannounced, on-site quarterly inspections to collect samples from bulk milk pickup tankers and to review industry records of the sampling program. Samples should be collected and analyzed from at least 10% of the bulk milk pickup tankers scheduled to arrive on the day of the inspection. The method used shall be appropriate for the drug being analyzed and shall be capable of detecting the same drugs at the same concentrations as the method being used by industry. Alternately, the Regulatory Agency or Laboratory Evaluation Officer (LEO) may take known samples with them on the audit visit and observe the industry analyst test the samples. Receiving locations that choose to certify all receiving analysts, certified under the provisions of the NCIMS Laboratory Certification Program, are exempt from the sample collection requirements of this Section. Receiving locations where all approved receiving Industry Analysts and Industry Supervisors successfully participate in a biennial on-site evaluation and annual spilt sample comparisons by LEOs are also exempt from the sample collection requirements of this Section.

A review shall include, but not be limited to, the following:

1. Is the program an appropriate routine monitoring program for the detection of drug residues?
2. Is the program utilizing appropriate test methods?
3. Is each producer's milk represented in a testing program for drug residues and tested at the frequency prescribed in I. A. for drug residues?
4. Is the program assuring timely notification to the appropriate Regulatory Agency of positive results, the ultimate disposition of the bulk milk pickup tanker milk, and of the traceback to the farm of origin?

5. Is the farm pickup suspended until subsequent testing establishes the milk is no longer positive for drug residues?

To satisfy these requirements:

a. There should be an agreement between the Regulatory Agency and industry that would specify how this notification is to take place. This notification must be "timely" for example by telephone or fax, and supported in writing.

b. This ultimate disposition should either be prearranged in an agreement between the Regulatory Agency and the industry, or physically supervised by the Regulatory Agency. The milk should be disposed of in accordance with the provisions of M-I-90-9 or an FDA and Regulatory Agency reviewed and accepted Beta lactam milk diversion protocol for use as animal feed.

c. All screening test positive (confirmed) loads must be broken down (producer traceback) using the same or an equivalent test method (M-I-96-10, latest revision). Confirmation tests (load and producer traceback/permit action) shall be performed by an Official or Officially Designated Laboratory or Certified Industry Supervisor. Positive producers shall be handled in accordance with this Appendix.

d. The suspension and discontinuance of farm bulk milk tank pick up is the responsibility of the industry, under the direction and supervision of the Regulatory Agency. At the discretion of the Regulatory Agency, records should be maintained by industry and/or the Regulatory Agency that:

(1) Establish the identity of the producer and the identity of the load that tested positive; and

(2) Establish that no milk is picked up from the positive testing producer until the Regulatory Agency has fulfilled their obligations under II.-ENFORCEMENT of this Appendix and cleared the milk.

Sufficient records should be reviewed to assure that all farm bulk milk pickup tankers are sampled before commingling and the results were made available to the appropriate BTU(s).
The Regulatory Agency shall also perform routine sampling and testing for drug residues determined to be necessary as outlined in Section 6 of this *Ordinance*.

ENFORCEMENT:

If testing reveals milk positive for drug residues, the milk shall be disposed of in a manner that removes it from the human or animal food chain, except where acceptably reconditioned under FDA Compliance Policy Guide (CPG 7126.20). The Regulatory Agency shall determine the producer(s) responsible for the violation.

Suspension: Any time milk is found to test as a confirmed positive for a drug residue, the Regulatory Agency shall immediately suspend the producer's Grade "A" permit or equally effective measures shall be taken to prevent the sale of milk containing drug residues.
Penalties: Future pick-ups are prohibited until subsequent testing reveals the milk is free of drug residue. The penalty shall be for the value of all milk on the contaminated load plus any costs associated with the disposition of the contaminated load. The Regulatory Agency may accept

certification from the violative producer's milk marketing cooperative or purchaser of milk as satisfying the penalty requirements.
Reinstatement: The Grade "A" producer's permit may be reinstated, or other action taken, to allow the sale of milk for human food, when a representative sample taken from the producer's milk, prior to commingling with any other milk, is no longer positive for drug residue.
Follow-Up: Whenever a drug residue test is positive, an investigation shall be made to determine the cause. The farm inspection is completed by the Regulatory Agency or its agent to determine the cause of the residue and actions taken to prevent future violations including:

1. On-farm changes in procedures necessary to prevent future occurrences as recommended by the Regulatory Agency.
2. Discussion and education on the Drug Residue Avoidance Control measures outlined in Appendix C. of this *Ordinance.*
Permit Revocation: After a third violation in a twelve (12) month period, the Regulatory Agency shall initiate administrative procedures pursuant to the revocation of the producer's Grade "A" permit under the authority of Section 3. Permits of this *Ordinance*, due to repeated violations.

REGULATORY AGENCY RECORDS:

In regards to the industry reporting a positive tanker result, the Regulatory Agency's records should indicate the following:

1. What were the Regulatory Agency's directions?
2. When was the Regulatory Agency notified? By whom?
3. What was the identity of the load?
4. What screening and/or confirmatory test(s) were used and who were the analyst(s)?
5. What was the disposition of the adulterated milk?
6. Which producer(s) was responsible?
7. Record of negative test results prior to subsequent milk pickup from the violative producer(s).

III. TESTING PROGRAM FOR DRUG RESIDUES ESTABLISHED

DEFINITIONS:

For purposes of this Appendix the following definitions are to be used:

1. **Presumptive Positive:** A presumptive positive test is a positive result from an initial testing of a tanker using an M-a-85 (latest revision) approved test, which has been promptly repeated in duplicate with positive and negative controls using the same test, on the same sample, with one or both of these duplicate retests giving a positive result.
2. **Screening Test Positive (Load Confirmation):** A screening test positive result is obtained when the presumptive positive sample is tested in duplicate, using the same or equivalent (M-I-96-10, latest revision) test as that used for the presumptive positive, with a positive and negative control, and either or both of the duplicates are positive and the controls give the proper results.

A screening test positive (load confirmation) is to be preformed by an Official State Laboratory, Officially Designated Laboratory or Certified Industry Supervisor using the same or an equivalent test (M-I-96-10, latest revision).

3. **Producer Traceback/Permit Action:** A producer traceback/permit action test is performed after a screening test positive load is identified by an Official State Laboratory, Officially Designated Laboratory or Certified Industry Supervisor using the same or an equivalent (M-I-96-10, latest revision) test as was used to obtain the screening test positive (load confirmation). A confirmed producer test positive result is obtained in the same manner as a confirmation (screening test positive) for a load. After an initial positive result (producer presumptive positive) is obtained on a producer sample, that sample is then tested in duplicate using the same test as was used to obtain the producer presumptive positive result. This testing is performed with a positive and negative control and if either or both of the duplicates are positive and the controls give the proper results, the producer sample is confirmed as positive.

4. **Individual Producer Load:** An individual producer bulk milk pickup tanker is a tanker, or a compartment of a tanker, that contains milk from only one (1) dairy farm.

5. **Industry Analyst:** A person under the supervision of the Certified Industry Supervisor or Industry Supervisor who is assigned to conduct screening of bulk milk pickup tankers for Appendix N. drug residue requirements.

6. **Industry Supervisor/Certified Industry Supervisor:** An individual trained by the State LEO who is responsible for the supervision and training of Industry Analysts who test bulk milk pickup tankers for Appendix N. drug residue requirements.

7. **Certified Industry Supervisor:** An Industry Supervisor who is evaluated and listed by a State LEO as certified to conduct drug residue screening tests at industry drug residue screening sites for *Grade "A" PMO*, Appendix N. regulatory actions (confirmation of tankers, producer traceback and/or permit actions).

CERTIFIED INDUSTRY SUPERVISORS; EVALUATION AND RECORDS:

References: *EML* and IMS-a-30, Supplement 2

1. **Certified Industry Supervisors/Industry Supervisors/Industry Analysts:** Regulatory Agencies may choose to allow Industry Supervisors to be certified. Under this program, these Certified Industry Supervisors may officially confirm presumptive positive tanker loads and confirm producer milk for regulatory purposes (producer traceback/permit action). In the implementation of Appendix N. of this *Ordinance,* the LEO will use the appropriate Appendix N. 2400 Series Form when evaluating Official State Laboratories, Officially Designated Laboratories or Certified Industry Supervisors, Industry Supervisors and Industry Analysts.

The Certified Industry Supervisor/Industry Supervisor shall report to the LEO the result of all competency evaluations performed on Industry Analysts. The names of all Certified Industry Supervisors, Industry Supervisors and Industry Analysts, as well as their training and evaluation status, shall be maintained by the State LEO and updated as replacement, additions and/or removals occur. The State LEO shall verify (document) that each Certified Industry Supervisor and/or Industry Supervisor has established a program that ensures the proficiency of the Industry Analysts they supervise. The State LEO shall also verify that each Industry Supervisor and Industry Analyst has demonstrated proficiency in performing drug residue analysis at least biennially. Verification may include an analysis of split samples and/or an on-site performance

evaluation or another proficiency determination that the State LEO and the Laboratory Quality Assurance Team (LQAT) agree is appropriate.

Failure by the Industry Supervisor or Industry Analyst to demonstrate adequate proficiency to the LEO shall lead to their removal from the LEO list of Industry Supervisors and/or Industry Analysts. Reinstatement of their testing status shall only be possible by completing retraining and/or successfully analyzing split samples and/or passing an on-site evaluation or otherwise demonstrating proficiency to the LEO. (Refer to IMS-a-30, Supplement 2, which describes the certification requirements for Certified Industry Supervisors and the training requirements for Industry Supervisors and Industry Analysts.)

2. **Sampling and Testing of Bulk Milk Pickup Tankers:** The bulk milk pickup tanker shall be sampled after the last producer has been picked up and before any additional commingling. The sample must be representative. The sample analysis shall be completed before the milk is processed.

3. **Tanker Unloaded Prior to Negative Test Result:** If the bulk milk pickup tanker is unloaded and commingled prior to obtaining a negative test result and the screening test is positive, the Regulatory Agency shall be immediately notified. The commingled milk is adulterated and unacceptable for human consumption regardless of any subsequent test results from the commingled milk. The milk shall be disposed of under the supervision of the Regulatory Agency.

BULK MILK PICKUP TANKER SCREENING TEST:

1. **Performance Tests/Controls:** Each lot of test kits purchased shall be tested by positive (+) and negative (-) controls, as defined in the SCREENING TESTS NECESSARY TO IMPLEMENT THE PROVISIONS OF APPENDIX N. FOR BULK MILK PICKUP TANKERS of this Section, in each screening facility prior to its initial use and each testing day thereafter. Records of all positive (+) and negative (-) control performance tests shall be maintained.

2. **Initial Drug Testing Procedures:** The following procedures apply to testing bulk milk pickup tankers for drug residues following the provisions of Appendix N. Industry analysts may screen tankers and receive or reject milk. Milk plants, receiving stations, transfer stations and other screening locations may choose to participate in the Industry Supervisor Certification Program.

   a. Industry Presumptive Positive Options: There are two (2) industry options for the milk represented by a presumptive positive sample:

      (1) The Regulatory Agency involved (origin and receipt) shall be notified. The appropriate Regulatory Agency shall take control of the presumptive positive load. A written copy of the presumptive positive test results shall follow the initial Regulatory Agency notification. Testing for confirmation of that presumptive positive load shall be in an Official State Laboratory, Officially Designated Laboratory or by a Certified Industry Supervisor at a location acceptable to the Regulatory Agency. Documentation of prior testing shall be provided to the analyst performing the load confirmation. The presumptive positive load may be re-sampled, at the direction of the Regulatory Agency, prior to analysis with the same or equivalent test (M-I-96-10, latest revision), as was used to obtain the presumptive positive result. This analysis shall be done in duplicate with positive (+) and negative (-) controls. If either or both of the duplicate samples are positive and the positive (+) and negative (-) controls give the correct reactions, the sample is deemed a Screening Test Positive (Confirmed Load). A written copy of the test

results shall be provided to the Regulatory Agency. The milk, which that sample represents, is no longer available for sale or processing into human food.

(2) The owner of the presumptive positive milk may reject the load without further testing. At that time the milk represented by the presumptive positive test is not available for sale or processing into human food. The milk cannot be re-screened. The Regulatory Agency involved (origin and receipt) shall be notified. Under this option, producer tracebacks shall be conducted.

3. **Re-Sampling:**

a. Presumptive Results: Occasionally, an error in sampling or a suspicious test result is discovered after a presumptive result is initially obtained. When this happens, the Regulatory Agency may allow the industry to re-sample the bulk milk pickup tanker. The reasons that made the re-sampling necessary shall be clearly documented in testing records and reported to the Regulatory Agency. This written record shall be provided to the Regulatory Agency and shall be maintained with the record of the testing for that load.

b. Screening Test Results: Re-sampling or additional analysis of screening test results should be discouraged. However, the Regulatory Agency may direct re-sampling and/or analysis, when it has determined that procedures for sampling and/or analysis did not adhere to accepted NCIMS practices (*SMEDP,* 2400 Series Forms, Appendix N. and the applicable FDA interpretative or informational memoranda). This decision by the Regulatory Agency must be based on objective evidence. A Regulatory Agency allowing re-sampling must plan a timely follow-up to identify the problem and initiate corrective action to ensure the problem that led to the need for re-sampling is not repeated. If re-sampling and/or analysis is necessary, it shall include a review of the samplers, analysts, and/or laboratories to identify the problem(s) and initiate corrective action to ensure the problem(s) is not repeated. The reasons that made the re-sampling or analysis necessary shall be clearly documented in testing records maintained by the Regulatory Agency, and shall be maintained with the record of the testing for that load.

4. **Producer Traceback:** All screening test positive (confirmed) loads must be broken down (producer traceback) using the same or an equivalent test method (M-I-96-10, latest revision). Confirmation tests (load and producer traceback/permit action) shall be performed in an Official State Laboratory, or Officially Designated Laboratory or by a Certified Industry Supervisor. Positive producers shall be handled in accordance with this Appendix.

Assuring Representative Samples From Individual-Producer Loads And Multiple-Farm Tank Loads From An Individual Producer: Representative samples shall be secured from each farm storage tank(s) of milk prior to loading onto a bulk milk pickup tanker at the dairy farm. The representative sample(s) shall travel with the bulk milk pickup tanker to a designated location acceptable to the Regulatory Agency.

Record Requirements: Results of all testing may be recorded in any format acceptable to the Regulatory Agency that includes at least the following information:

1. Identity of the person doing the test;
2. Identity of the bulk milk pickup tanker being tested*;
3. Date/time the test was performed (Time, Day, Month and Year);
4. Identity of the test performed/lot #/any and all controls (+/-);

5. Results of the test, if the analysis results are positive the record should show:
   a. The identity of each producer contributing to the positive load;
   b. Who at the Regulatory Agency was notified;
   c. When did this notification take place; and
   d. How was this notification accomplished.
6. Follow-up testing if initial test was positive/any and all controls (+/-);
7. Site where test was performed; and
8. Prior test documentation shall be provided for a presumptive positive load.

*Include the BTU number(s) of the farms present on the bulk milk pickup tanker with the above information.

SCREENING TESTS NECESSARY TO IMPLEMENT THE PROVISIONS OF APPENDIX N. FOR BULK MILK PICKUP TANKERS:

1. **Performance Tests/Controls (+/-):**
   a. Each lot of kits purchased is tested by positive (+) and negative (-) controls.
   b. Each screening facility runs a positive (+) and negative (-) control performance test each testing day.
   c. All NCIMS Approved Bulk Milk Pickup Tanker Screening Tests Include The Following Format: All presumptive positive test results are to be repeated in duplicate as soon as possible at the direction of the Regulatory Agency on the same sample with single positive (+) and negative (-) controls by a certified analyst (Official State Laboratory, Officially Designated Laboratory or Certified Industry Supervisor) using the same or equivalent test (M-I-96-10, latest revision). If the duplicate tests, with appropriate control (+/-) results are negative (-), the tanker is reported as negative. If one or both duplicate test(s) is positive (+), the test result is reported to the Regulatory Agency of the State in which the testing was conducted, as a screening positive.
   d. All positive (+) controls used for drug residue testing kits are labeled to indicate a specific drug and concentration level for that drug.
      (1) For tests that only detect Penicillin, Ampicillin, Amoxicillin and Cephapirin, the positive (+) control is Pen G @ 5 ± 0.5 ppb.
      (2) For test kits validated for the detection of Cloxacillin, the positive (+) control may be Cloxacillin @ 10 ± 1 ppb.
      (3) For test kits validated for one (1) drug residue only, the positive (+) control is ± 10% of the safe level/tolerance of the drug residue detected.
2. **Work Area:**
   a. Temperature within specifications of the test kit manufacturer's labeling.
   b. Adequate lighting for test kit procedure.
3. **Test Kit Thermometers:**
   a. Thermometer traceable to a NIST Certified Thermometer.
   b. Graduation interval not greater than 1°C.
   c. Dial thermometers are not used to determine temperatures of samples, reagents, refrigerators, or incubators in milk laboratories.
4. **Refrigeration:**
   a. Test kit reagent storage temperature specified by manufacturer.
5. **Balance (Electronic):**

a. 0.01 g for preparation of positive (+) controls.
b. Balance with appropriate sensitivity for calibration of pipetting devices within a tolerance of ± 5%. These devices may be calibrated at another location acceptable to the State LEO.

6. **Screening Test Sampling Requirements:**
   a. Temperature of milk in the bulk milk pickup tanker determined and recorded.
   b. Representative bulk milk pickup tanker sample for drug residue testing collected.
   c. Samples tested within seventy-two (72) hours of collection.
7. **Screening Test Volumetric Measuring Devices:**
   a. Single use devices provided by kit manufacturers are acceptable for Appendix N. screening analysts.
   b. NCIMS Certified Laboratories require calibrated pipetting/dispensing devices. These devices may be calibrated at another location acceptable to the State LEO.
   c. Measuring devices with tips bearing calibration lines provided by test kit manufacturers are acceptable for Appendix N. screening.

IV. ESTABLISHED TOLERANCES AND/OR SAFE LEVELS OF DRUG RESIDUES

"Safe levels" are used by FDA as guides for prosecutorial discretion. They do not legalize residues found in milk that are below the safe level. In short, FDA uses the "safe levels" as prosecutional guidelines and in full consistency with CNI v. Young stating, in direct and unequivocal language, that the "safe levels" are not binding. They do not dictate any result; they do not limit the Agency's discretion in any way; and they do not protect milk producers, or milk from court enforcement action.
"Safe levels" are not and cannot be transformed into tolerances that are established for animal drugs under Section 512 (b) of the FFD&CA as amended . "Safe levels" do not:

1. Bind the courts, the public, including milk producers, or the Agency, including individual FDA employees; and
2. Do not have the "force of law" of tolerances, or of binding rules.

Notification, changes or additions of "safe levels" will be transmitted via Memoranda of Information (M-I's).

V. APPROVED METHODS

Regulatory Agencies and industry shall use tests from the most recent revision of M-a-85 for analysis of bulk milk pickup tankers for Beta lactam residues, following the testing procedures specified in Section III of this Appendix. Association of Official Analytical Chemists (AOAC) First Action and AOAC Final Action methods are accepted in accordance with Section 6 of this *Ordinance*. Drug residue detection methods shall be evaluated at the safe level or tolerance. Regulatory action based on each test kit method may be delayed until the evaluation is completed and the method is found to be acceptable to FDA and complies with the provisions of Section 6 of this *Ordinance*.
One (1) year after test(s) have been evaluated by FDA and accepted by the NCIMS for a particular drug or drug family, other unevaluated tests are not acceptable for screening milk. The acceptance of evaluated tests does not mandate any additional screening by industry with the evaluated method.

APPENDIX O. VITAMIN FORTIFICATION OF FLUID MILK PRODUCTS

PROCESS/METHODS OF VITAMIN ADDITION

Vitamin fortification can be accomplished by the addition of vitamins at many different points in the processing system, preferably after separation, including the pasteurizing vat, to the HTST constant-level tank, or on a continuous basis into the pipeline after standardization and prior to pasteurization in accordance with the manufacturer's recommendations. Both batch addition and addition with metering pumps can be used. The batch procedure requires accurate measurement of the volume of milk to be fortified, accurate measurement of the vitamin concentrate, and proper mixing. When a vitamin metering pump(s) is used with an HTST or HHST unit the pump(s) must be installed so as to be activated only when the unit is in forward-flow. The addition of vitamins must be accomplished prior to pasteurization in accordance with the manufacturer's recommendations.

The problem of under fortification is often related to the point in the system where fortification takes place. Vitamins A and D are fat-soluble and will gradually become more concentrated in the milk fat portion of the milk. Both oil and water base vitamins are susceptible to this migration problem.

If vitamins are added in the proper amount before separation and standardization, and the product is separated and standardized, then the low fat product will tend to be under fortified and the high fat product over fortified. Water-soluble vitamin concentrates can minimize this problem if vitamins are added before separation. Processors who use this procedure should perform confirmatory assays to ensure proper fortification levels of each product.

Many HTST systems are now being used with in-line fat standardization, which also makes possible switching, without stopping, from milk and milk products being fortified with Vitamin D to those being fortified with both A and D. These systems require metered injection of the proper vitamins at a point after standardization and before pasteurization. Sanitary positive-displacement pumps are available for this purpose.

There are two (2) types available:

1. The first is a piston type metering pump without valves. It is equipped with a micrometer, which allows accurate and reproducible amounts of vitamins to be added based on the rate of product flow through the system.
2. The other type is a peristaltic pump that offers precise control. This precise control is possible since the volume can be controlled by the tubing size and the pump speed. This system simplifies cleaning, since only the tube is in contact with the vitamin concentrates.

These pumps have a history of reproducibility and reliability. All metering pumps should be designed to conform with this *Ordinance*.

The recommended injection point is after separation and prior to homogenization. This allows the homogenization process to distribute the vitamins throughout the milk. A check-valve is recommended to prevent milk from contaminating the vitamin concentrate.

Separate pumps, tubing and check-valves, are recommended when multiple types of vitamin concentrates are injected. (Refer to Figure 46)

Pumps should be calibrated based on the pasteurization system flow rate. If flow rates change for different milk products, additional vitamin pumps may be needed. Re-calibration of the metering pumps is not recommended without verifying the accuracy. Routine calibration of metering pumps is recommended. The following are recommended to achieve desired vitamin fortification levels:

1. Management must be committed to proper fortification and concerned with both over and under levels.
2. Design the system correctly for proper addition in which concentrate is added after standardization and before pasteurization.
3. Written procedures and training should be provided to all employees responsible for vitamin fortification for each milk and milk product to be fortified. These procedures should focus on milk or milk product start-up and milk or milk product change-over.
4. Maintain accurate records of vitamins used and milk and milk products produced, checked daily against theoretical use. Care should be taken that adequate fortification of small run milk or milk products like skim milk is not masked by much larger volumes of reduced fat (2%) or other partly skimmed milk products.

METERING PUMPS

Use an accurate, sanitary, positive-displacement metering pump with a scheduled cleaning procedure after use. For batch addition, use only accurate, calibrated measuring devices, such as plastic graduated cylinders, or pipettes. Measuring devices should be sized to the amount of concentrate added, i.e., if 8 mL is added, a 10 mL graduated cylinder would be appropriate. Measuring devices should be rinsed with the milk or milk product being fortified to insure no residual concentrate is left.

Use a check-valve on the injection line to prevent milk or milk product from being pushed back into the line. This depends on the pump displacement.

Check the meter calibration regularly, including both the pump and the tubing, by determining delivery rate accuracy. Use only properly calibrated tubing for peristaltic pump systems and replace the tubing regularly.

Storage vessels used for supplying vitamin concentrate to metering pumps should be emptied on a regular basis. A regular systematic cleaning and sanitizing schedule must be maintained for these vessels, pumps and tubing.

Vitamin concentrates should be stored and held in accordance with the manufacturer's recommendations for maximum shelf life.

Vitamin metering pumps should be interwired with the flow divert and recycle valves to prevent operation during divert and/or recycle flows.

Analyze finished products regularly. Results should be reported in International Units (I.U.)/Quart. Because of the sensitivity and difficulty in performing these tests, it is necessary to procure the services of a competent laboratory; one that is familiar with the handling and testing of vitamin fortified dairy products.

Care must be taken when reprocessing reclaimed product so vitamin A and/or D levels do not exceed the label claims by more than 150%.

GOOD MANUFACTURING PRACTICES

Good manufacturing practices require that the vitamin A and D levels be in compliance with CFR Title 21. CFR 21 131.110 states: "(b) Vitamin addition (Optional). (1) If added, vitamin A shall be present in such quantity that each quart of the food contains not less than 2000 International Units thereof within limits of good manufacturing practices. (2) If added, vitamin D shall be present in such quantity that each quart of the food contains 400 International Units thereof within limits of good manufacturing practice."

For the purpose of label claims, compliance for nutritional labeling of food CFR 21 101.9 applies, and states:

(3) (i) *Class I.* Added nutrients in fortified or fabricated foods; and
(4) (i) *Class I vitamins, mineral, protein, dietary fiber, or potassium.* The nutrient content of the composite is at least equal to the value for that nutrient declared on the label.

Therefore, if added, the acceptable range for vitamins A and D, in the standardized milk products listed in 21 CFR, 131.110 Milk, 131.111 Acidified Milk, 131.112 Cultured Milk, 131.127 Nonfat Dry Milk Fortified with Vitamin A and D (vitamin addition not optional), 131.200 Yogurt, 131.203 Lowfat Yogurt, and 131. 206 Nonfat Yogurt are as follows:

* 100% - 150% of label claims = (400 - 600 I.U. per quart for vitamin D and 2000 - 3000 I.U. per quart for vitamin A)

*Within method variability

Fluid milk products found below 100% or above 150% of the required values or label claims should be resampled and the cause of the problem determined.
Additionally, CFR 21 130.10-*Requirements for foods named by use of a nutrient content claim and a standardized term* states: "That nutrients must be added to the food to restore nutrient levels so that the product is not nutritionally inferior to the standardized food for products which combine a nutrient content claim, i.e., lowfat, non-fat, or reduced fat, with a standardized term, i.e., milk, sour cream, eggnog." Therefore, vitamins A and D must be added to dairy products from which fat has been removed; such as, reduced fat, lowfat, and nonfat dairy products, in an amount necessary to replace the amount of these vitamins lost in the removal of fat.

TESTING METHODS

Test methods used for the detection of vitamins A and/or D_3 shall be acceptable to FDA or other official methodologies that give statistically equivalent results to the FDA methods. Vitamin analysis shall be conducted in a laboratory accredited by FDA and acceptable to the Regulatory Agency.

TYPE OF CONCENTRATES AVAILABLE

A number of different types of concentrates are available. All contain vitamin D and/or vitamin A palmitate with a carrier consisting of any of the following: butter oil, corn oil, evaporated milk, non-fat dry milk, polysorbate 80, propylene glycol and glycerol monooleate. It is best to store all concentrates under refrigeration unless manufacturer's directions indicate otherwise. To achieve adequate dispersion, viscous concentrates should be brought to room temperature before addition.

NEED FOR ADDITION

Vitamin A is fat-soluble. It will dissolve when mixed with fat and will not dissolve in water. For this reason, Vitamin A is found in whole milk and to a lesser degree in low fat and absent in non-fat milk, unless these products are fortified.

Vitamin D is the major regulator of calcium absorption in the intestine. Fortification of fresh milk with Vitamin D is acknowledged to have virtually eliminated rickets in milk drinking children. Since normal levels of Vitamin D are necessary for optimal calcium absorption in children, it is also known that these levels are required as one increases in age. It has been associated with reducing the incidence of osteoporosis in premenopausal women.

Vitamin A performs many functions. One is to enable the retina of the eye to respond to dim light. Deficiency of Vitamin A produces night blindness. Vitamin A is also involved in the ability of the eye to discern color.

Excessive levels of Vitamins A and D in fluid milk can be a potential threat to public health. Over fortification with levels of Vitamin A over 6,000 I.U. and Vitamin D over 800 I.U. in fluid milk should be referred to FDA for a health hazard review.

PROBLEMS INVOLVED WITH FORTIFICATION

Milk and milk products that contain a large proportion of fat are relatively good dietary sources of Vitamin A, but as is the case with other natural foods, the Vitamin D content of unfortified milk is quite low. As with other milk components, Vitamin A and D levels are affected by breed, season, diet, lactation and in the case of Vitamin D, animal exposure to sunlight.

In general, when lactating animals are transferred from pasture to winter rations in the fall, a decline in the Vitamin A and D levels can be expected in the raw milk. This occurs slowly through the winter season until the animals are once more on pasture in the spring. With the proper selection of feed and diet concentrates this effect can be kept to a minimum. Natural levels of Vitamin A range from 400 I.U. in winter to 1200 I.U. in summer, and Vitamin D, 5 I.U. in winter to 40 I.U. in summer. These are approximate ranges to indicate possible seasonal variations. Because of seasonal and other variations in natural vitamin levels it is necessary to monitor the level of fortification to assure that levels are within good manufacturing practices.

Vitamin concentrate potency degrades with time. Concentrates should be stored in accordance with manufacturer's recommendation to maintain label potency. Vitamin concentrate potency should be verified by the vitamin supplier.

Vitamin D is very stable in homogenized whole milk and is not affected by pasteurization or other processing procedures. Vitamin D in fortified homogenized whole milk will remain

constant with little or no loss of vitamin potency during long periods of proper storage. No loss of vitamin D will be experienced under normal shelf life periods.
Vitamin A and D fortified skim milk products are subject to decreases in vitamin A, because the vitamin is no longer protected by fat as it is in whole milk. In fluid skim or low fat milk, added vitamin A deteriorates gradually during normal storage of the milk at 4.4°C (40°F) in the dark but is destroyed rapidly when the milk is exposed to sunlight in transparent glass bottles or translucent plastic containers. The photo destruction of added vitamin A is dependent on the intensity and wave-length of light and the milk source. The use of amber or brown glass bottles, pigmented plastic containers formulated with specific light barriers and colored paper cartons retard this destruction. Vitamin A losses in reduced fat milk (2%) from five (5) dairy plants ranged from 8% to 31% when they were exposed to 200 foot-candles (220 lux) of fluorescent light for twenty-four (24) hours in opaque plastic containers. Use of pigmented containers or gold shields over fluorescent tubes practically eliminated these losses.

NOTE: Figure 46 details a two (2) speed vitamin fortification installation using two (2) pumps and two (2) vitamin concentrate sources. This enables changing from different vitamin concentrates and different speed pumps via the adjustment of three-way valves.

Recommendations:
1. Use a sanitary check-valve(s) to separate milklines from vitamin concentrates.
2. All milk or milk product-contact surfaces should be of a sanitary design, easily cleanable and available for inspection.

Figure 46. Vitamin Fortification

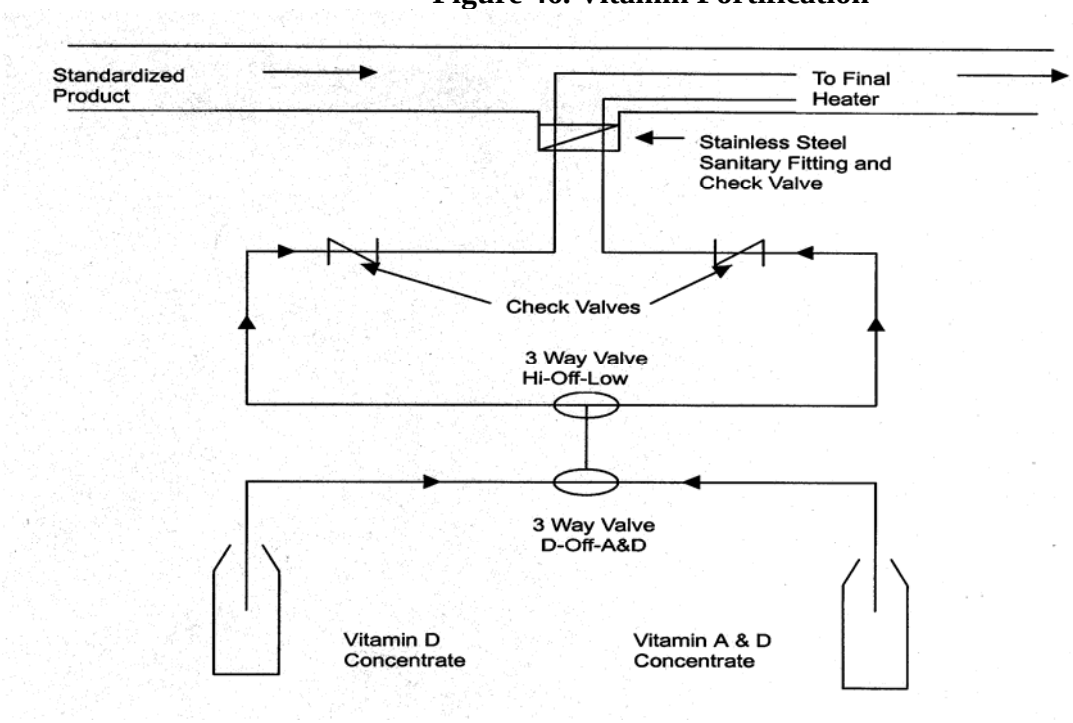

APPENDIX P. PERFORMANCE-BASED DAIRY FARM INSPECTION SYSTEM

PREFACE

A performance-based inspection system is an option to the traditional routine inspection frequency of at least once every six (6) months on Grade "A" dairy farms. This option provides States with a choice. For some States, inspecting every farm routinely twice a year may provide effective regulatory oversight and make efficient use of inspection resources. In other States, however, an optional system, which determines routine farm inspection frequency based on producer milk quality and inspection performance may be more desirable, equally effective, and make the most efficient use of limited inspection resources. The overall inspection effort devoted to a performance-based farm inspection system may be more or less than the traditional inspection system, which requires a routine inspection at least once every six (6) months per farm.

INSPECTION INTERVAL AND CRITERIA

Dairy farms will be categorized at least every three (3) months using the previous twelve (12) month farm inspection and milk quality data. The following criteria will be used to categorize farms into four (4) inspection intervals as defined below:

MINIMUM ONE (1) YEAR INSPECTION INTERVAL (ONE (1) INSPECTION EACH TWELVE (12) MONTHS):

All criteria below must have been met for the previous twelve (12) months:

1. No more than one (1) sample with a Standard Plate Count (SPC) >25,000, but less than 100,000;
2. All Somatic Cell Count (SCC) samples ≤ 500,000;
3. No cooling temperature violations;
4. No drug residue violations;
5. No "critical control point" violations observed during farm inspections. Critical violations are identified on the Dairy Farm Inspection Report as:
    a. 10-Cleaning and 11-Sanitization;
    b. 15(d)-Drugs properly labeled and 15(e)-Drugs properly used and stored; and
    c. 18-Cooling (Significant Violations.
6. No violation that creates a substantial risk of adulteration or an imminent health hazard;
7. No more than five (5) violations documented on any inspection sheet;
8. No consecutive inspection violations on any inspection Item;
9. No record of suspended permit, certification or license due to inspection, milk quality or drug residue deficiencies; and
10. Bacteriologically safe water supply at the time of categorization.

NOTE: Farms in this category who are re-categorized to a six (6) month inspection interval for a single violation of one (1) milk quality parameter (SCC > 500,000 or cooling temperature

violation) may be re-categorized to the one (1) year inspection interval if all ten (10) criteria listed above are met for the next six (6) months.

MINIMUM SIX (6) MONTH INSPECTION INTERVAL (ONE (1) INSPECTION EACH SIX (6) MONTHS):

All criteria below must have been met for the previous twelve (12) months:

1. May have more than one (1) sample with SPC >25,000;
2. May have one (1) or more SCC sample >500,000;
3. No more than one (1) warning letter issued due to non-compliance of two (2) out of four (4) previous official sample results for SPC and SCC;
4. No cooling temperature violations;
5. No drug residue violations;
6. No "critical control point" violations observed during farm inspections. Critical violations are identified on the Dairy Farm Inspection Report as:
   a. 10-Cleaning and 11-Sanitization;
   b. 5(d)-Drugs properly labeled and 15(e)-Drugs properly used and stored; and
   c. 18-Cooling (Significant Violations).
7. No violation that creates a substantial risk of adulteration or an imminent health hazard;
8. No more than five (5) violations documented on any inspection sheet;
9. No consecutive inspection violations on any inspection Item;
10. No record of suspended permit, certification or license due to inspection, milk quality or drug residue deficiencies; and
11. Bacteriologically safe water supply at the time of categorization.

NOTE: Farms meeting the criteria for one (1) year or six (6) month inspection intervals but with less than twelve (12) months of farm inspection and milk quality history, i.e., new farms, will be assigned to a six (6) month inspection interval.

MINIMUM FOUR (4) MONTH INSPECTION INTERVAL (ONE (1) INSPECTION EACH FOUR (4) MONTHS):

Any criteria listed below, results in the farm being placed into this inspection interval for twelve (12) months from the next re-categorization:

1. More than one (1) warning letter issued due to non-compliance of two (2) out of four (4) previous official sample results for SPC and SCC;
2. Farm conditions that caused the Regulatory Agency to take official regulatory action, i.e., warning letter, intent to suspend, reinspection, etc.;
3. One (1) drug residue violation;
4. "Critical control point" violations observed during farm inspections. Critical violations are identified on the Dairy Farm Inspection Report as:
   a. 10-Cleaning and 11-Sanitization;
   b. 15(d)-Drugs properly labeled and 15(e)-Drugs properly used and stored; and
   c. 18-Cooling (Significant Violations).

5. A violation that creates a substantial risk of adulteration or an imminent health hazard;
6. More than five (5) violations on any inspection; and
7. Unsafe water supply at the time of categorization.

MINIMUM THREE (3) MONTH INSPECTION INTERVAL (ONE (1) INSPECTION EACH THREE (3) MONTHS):

Any criteria listed below results in the farm being placed into this inspection interval for twelve (12) months from the next re-categorization:

1. More than one (1) drug residue violation;
2. Any farm suspended from the market by the Regulatory Agency during the previous twelve (12) month evaluation period for any reason other than drug residue violations; and
3. More than one (1) incident where violative farm conditions or milk quality parameters resulted in the Regulatory Agency taking official regulatory action, i.e., warning letter, intent to suspend, reinspection, etc.

NOTE: The above guidelines for Grade "A" farm inspection intervals are not intended to prevent farm inspections at more frequent intervals if in the judgment of the Regulatory Agency more frequent intervals are necessary.

APPENDIX Q. OPERATION OF AUTOMATIC MILKING INSTALLATIONS FOR THE PRODUCTION OF GRADE "A" RAW MILK FOR PASTEURIZATION

This Appendix is intended to clarify how AMIs are to perform to be considered in compliance with the *Grade "A" PMO*. It is formatted to follow the Items as outlined in Section 7. STANDARDS FOR GRADE "A" RAW MILK FOR PASTEURIZATION, ULTRA-PASTEURIZATION OR ASEPTIC PROCESSING. Both requirements and recommendations are discussed.

ITEM 1r. ABNORMAL MILK

AMIs shall have the capability to identify and discard milk from animals that are producing milk with abnormalities. Odor is currently evaluated on a bulk tank basis and should be no different for a herd using AMI technology.

Animals producing milk with abnormalities shall be diverted to a holding pen to be milked immediately prior to the system being cleaned and sanitized, or the animal(s) are identified through an appropriate identification system so that their milk will be automatically excluded from the milk offered for sale, provided that the parts of the milking system that came into contact with the milk with abnormalities are immediately cleaned and sanitized.

ITEM 2r. MILKING BARN, STABLE OR PARLOR - CONSTRUCTION

The AMI milker box shall be treated the same as any other parlor. The goal is a clean environment in which to milk animals. All ventilation air must come from outside the cattle housing area. It is recommended that the AMI be located to provide clean access for personnel.

ITEM 3r. MILKING BARN, STABLE OR PARLOR – CLEANLINESS

The AMI milker box shall be kept as clean as any milking and equipment cleaning area. It is recommended that the milking platform be regularly flushed with water to remove any manure that may have accumulated.

ITEM 9r. UTENSILS AND EQUIPMENT - CONSTRUCTION

AMIs are the same as any other milking system from a sanitary construction standpoint and shall meet the same standards as a conventional milking system in respect to fit and finish of the milk contact surfaces.

ITEM 10r. UTENSILS AND EQUIPMENT – CLEANING

AMIs are a continuous milking system and shall be shut down to clean at an interval sufficient to prevent the milking system from building up with soils. It is recommended that this interval not to exceed 8 hours.

ITEM 11r. UTENSILS AND EQUIPMENT – SANITIZATION

AMIs shall be sanitized after each cleaning and/or before each use, as is the case with any other milking system.

ITEM 12r. UTENSILS AND EQUIPMENT – STORAGE

AMIs shall have positive air ventilation systems in operation whenever the system is cleaning. The air for this system must come from outside the cattle housing area and should be as clean and dry as practical. This positive air system may also need to run during milking if needed to minimize odor, moisture and/or for pest control.

ITEM 13r. MILKING - FLANKS, UDDERS AND TEATS

AMI manufacturers shall submit data to FDA to show that the teat prepping system employed in their system is equivalent to Item 13r. Administrative Procedures #4: "Teats shall be treated with a sanitizing solution just prior to the time of milking and shall be dry before milking." Each installer shall provide the producer and the Regulatory Agency with a copy of this approval, including a detailed description of the approved procedure. Each producer shall keep a copy on file at the farm.

ITEM 14r. PROTECTION FROM CONTAMINATION

The teat cups of the milking cluster need to be adequately shielded during the udder prepping process to assure that contaminants may not enter through the teat cup and get into the milk.
AMIs are designed to automatically shift from milk to wash; therefore, adequate separation of milk and CIP solution shall be provided to minimize the risk of cross contamination of milk with cleaning and sanitizing solutions. A fail-safe valve system equivalent to an inter-wired block-and-bleed, as referenced in Item15p.(B), shall be located as needed to prevent cross contamination. Separation shall be provided between, milk with abnormalities and milk intended for sale, and between cleaning/sanitizing solutions and milk intended for sale.
AMIs, which have a pipe into the wash vat that is continuously connected to the system, shall have a valving system that provides for an air break equal to the diameter of the wash line.

ITEM 18r. RAW MILK COOLING

For AMIs the raw milk for pasteurization shall be cooled to 10ºC (50ºF) within four (4) hours or less after starting the milking operation and the milk shall be cooled within two (2) more hours to 7ºC (45ºF). The bulk milk storage tank temperature should not exceed 7ºC (45ºF) after that point. Bulk milk tank recording thermometers are recommended.

APPENDIX R. DETERMINATION OF TIME/TEMPERATURE CONTROL FOR SAFETY MILK AND MILK PRODUCTS

The Institute of Food Technologists (IFT) prepared and submitted a report as part of a contract with FDA that contains responses to various questions posed by FDA about potentially hazardous food (PHF). IFT reviewed the evolution of the term, PHF, and recommended a change to time/temperature control for safety (TCS) food, as well as a science-based framework for determining the effectiveness of processing technologies that formulate a food.

The report examines intrinsic factors; such as, a_w, pH, redox potential, natural and added antimicrobial and competitive microorganisms, and extrinsic factors; such as, packaging, atmospheres, storage conditions, processing steps and new preservation technologies that influence microbial growth. The report also analyzes microbial hazards related to time/temperature control of foods for safety.

IFT developed a framework that could be used to determine whether a food is a TCS or not. Part of the framework, applicable to Grade "A" milk and milk products, includes two tables that consider the interaction of pH and a_w in milk and milk products, whether the milk or milk product is pasteurized and subsequently packaged (Table A), or not pasteurized or pasteurized but not packaged (Table B). When further product assessment (PA) is required, the application of microbiological challenge testing (inoculation studies) is discussed along with pathogen modeling programs and reformulation of the milk and/or milk product. An extensive reference list is included in the report.

TCS food is defined in terms of whether or not it requires time/temperature control for safety to limit pathogen growth or toxin formation. The definition does not address foods that do not support growth but may contain a pathogenic microorganism or chemical or physical food safety hazard at a level sufficient to cause foodborne illness or injury. The progressive growth of all foodborne pathogens is considered whether slow or rapid.

The definition of TCS takes into consideration a_w, pH, a_w and pH interaction, pasteurization and subsequent packaging for a relatively simple determination of whether the food requires time/temperature control for safety. If a milk or milk product is pasteurized to eliminate pathogenic vegetative cells, it needs to be addressed differently than a raw product or a raw product subjected to inadequate heating. In addition, if a milk or milk product is packaged after pasteurization to prevent re-contamination, higher ranges of pH and/or a_w can be tolerated because spore-forming bacteria are the only microbial hazards of concern. Milk and milk products must be protected from contamination in an area with limited access and packaged at a temperature in compliance with the *Grade "A" PMO* requirements. In some milk or milk products, it is possible that neither the pH value nor the a_w value is low enough by itself to control or eliminate pathogen growth; however, the interaction of pH and a_w may be able to accomplish it. This is an example of a hurdle technology. Hurdle technology is utilized when several inhibitory factors are used together to control or eliminate pathogen growth that would otherwise be ineffective when used alone.

Another important factor to consider is combination products. A combination product is one (1) in which there are two (2) or more distinct food components, and an interface between the two (2) components may have a different property than either of the components present. Determine whether the food has distinct components; such as, cottage cheese curd with fruits and/or vegetables to be added and the creaming mixture, or does it have a uniform consistency; such as,

the cottage cheese creaming mixture or plain yogurt. In these products, the pH at the interface is important in determining if the item is a TCS milk or milk product.
Appropriate evidence acceptable to FDA; such as other published scientific research and/or an inoculation study should be used to determine whether a food can be held without time/temperature control when:

1. Combination products are prepared; or
2. Other extrinsic factors (packaging/atmospheres) or intrinsic factors (redox potential, salt content, antimicrobials, etc.) found in the food are used to control or eliminate pathogen growth.

Before using Tables A and B, which are included in Definition GG. TIME/TEMPERATURE CONTROL FOR SAFETY MILK AND MILK PRODUCTS of this *Ordinance*, in determining whether a milk or milk product requires TCS, answers to the following questions should be considered:

1. Is the intent to hold the milk or milk product without using time or temperature control? If the answer is "No", no further action is required. The decision tree is not needed to determine if the item is a TCS milk or milk product.
2. Is the milk or milk product raw or heat-treated, or is the milk or milk product pasteurized?
3. Does the Grade "A" PMO already require TCS for the milk or milk product?
4. Does a product history with good scientific rationale exist indicating a safe history of use?
5. Is the milk or milk product processed and packaged so that it no longer requires TCS; such as, Grade "A" aseptically processed milk and milk products?
6. What is the a_w and pH of the milk or milk product in question using laboratory results accepted by FDA.

A milk or milk product designated PA (further product assessment required) in either Table A or B should be considered TCS until sufficient information is provided to demonstrate the safety of the product. The PA will be an evaluation of the product or product group's ability to not support pathogenic growth. Means to evaluate this assessment include (but are not limited to): literature review of similar products, inoculation studies, expert risk assessment, and/or state regulatory assessment.

INSTRUCTIONS FOR USING TABLES A AND B

1. Does the operator want to hold the milk or milk product without using time or temperature control?
   a. No: Continue holding the milk or milk product at 7°C (45°F) or less as required in the *Grade "A" PMO*.
   b. Yes: Continue using the decision tree to identify which table to use to determine whether TCS is required.
2. Is the milk or milk product pasteurized?
   a. No: The milk or milk product is either raw or heat-treated. Proceed to Step #3.
   b. Yes: The milk or milk product is pasteurized to the required minimum time and temperature for the milk or milk product as specified in Definition EE of this *Ordinance*. Proceed to Step #4.

3. Is the milk or milk product treated using some other method equivalent to pasteurization?
   a. No: The milk or milk product is raw or heat-treated, which may allow vegetative cells and spores to survive. Proceed to Step #6.
   b. Yes: If another method equivalent to pasteurization is used to destroy pathogens; such as, irradiation, high pressure processing, pulsed light, ultrasound, inductive heating, etc., the new technology must have been recognized by FDA as providing milk or milk product safety equal to pasteurization, and the effectiveness of the process must be demonstrated by sufficient evidence or other means. Proceed to Step #5.
4. Is it packaged to prevent re-contamination?
   a. No: Re-contamination of the product can occur after pasteurization because it is not immediately packaged. Proceed to Step #6 and use Table B.
   b. Yes: If the milk or milk product is packaged immediately after pasteurization to prevent re-contamination, higher ranges of a_w and/or pH can be tolerated because spore-forming bacteria are the only microbial hazard. Proceed to Step #6 and use Table A.
5. Further PA or plant documentation required.
   a. The manufacturer of this product may be able to supply evidence acceptable to FDA that indicate the milk or milk product can be safely held without TCS.
   b. Milk and milk products prepared or processed using new technologies may be held without time/temperature control provided the new technology has been recognized by FDA as providing milk or milk product safety equal to pasteurization and provided the effectiveness of the use of such technologies is based on evidence accepted by FDA.

6. Using the milk or milk product's processing parameters, known a_w and/or pH values, position the milk or milk product in the appropriate table.
   a. Choose the column under "pH Values" that contains the pH value of the milk or milk product in question.
   b. Choose the row under "a_w Values" that contains the a_w value of the milk or milk product in question.
   c. Note where the row and column intersect to identify whether the milk or milk product is Non-TCS and therefore does not require time/temperature control, or whether further PA is required. Other factors; such as, redox potential, competitive microorganisms, salt content or processing methods, may allow the product to be held without time/temperature control; however, evidence acceptable to FDA is required.

7. Use Table B for milk or milk products that are not pasteurized or pasteurized but not immediately packaged, where both pathogenic spores and vegetative cells may be a concern, or use Table A for milk and milk products that are pasteurized and immediately packaged, where only pathogenic spores are of concern.

8. Determine if the milk or milk product is Non-TCS or needs further PA.

Figure 47. Decision Tree for Using pH, a_w, or the Interaction of pH and a_w to Determine if a Milk or Milk Product Requires Time/Temperature for Safety

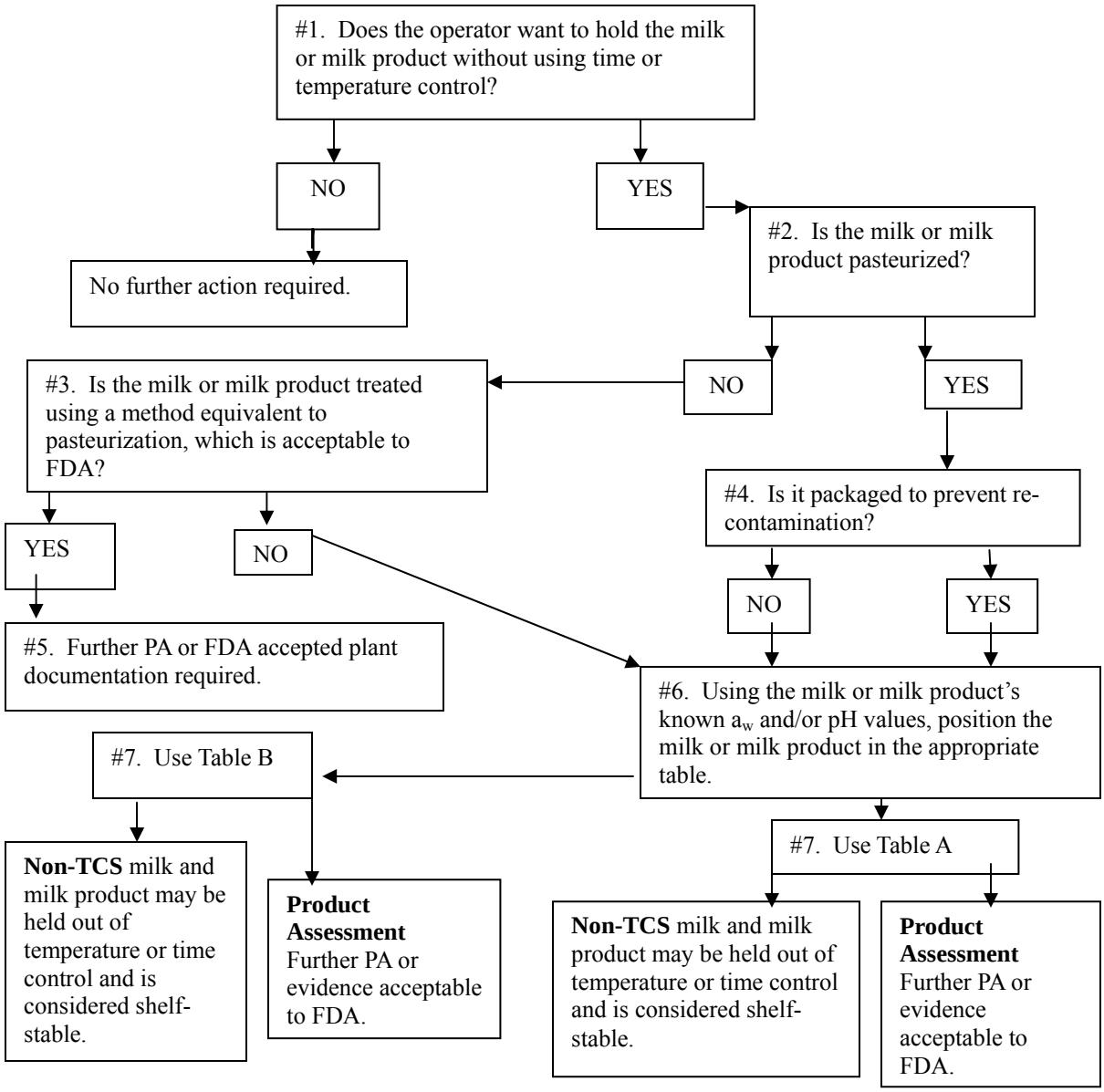

Source Document: Evaluation and Definition of Potentially Hazardous Foods, IFT, 2001 available at **http://www.cfsan.fda.gov/~comm/ift4exec.html**.

INDEX

Page

3-A Sanitary Standards 43, 65, 131, 199, 218, 227
Abnormal milking equipment and utensils 31
Accelerated Sampling 13, 189
Acidified sour cream, definition 312
Adulterated milk and milk products
  impounding 10
  insecticides 1, 31, 201
  prevention of, by added water (HTST) 91, 95
  sale of 1, 152
Agitation, sampling 26, 127
Air
  agitation 47, 74, 83, 215
  curtains 56
  drying equipment 215
  gap 60, 78, 220
  under pressure 48, 74, 151, 199, 216, 297
Airspace
  heating 82
  thermometers 84, 99, 103, 249, 251
Animal disease control 121
Animal drug labeling 47
Animals other than cows in dairy barn 31, 32, 33
Appendix N-Drug Residue Testing 314, 322
Aseptically processed, definition 1, 76
  aseptic processing systems 78, 92, 96, 99, 109, 209
  controlling added water 95
  cooling exemption 19, 22, 24, 104, 338
  examination of 21, 24, 29, 250-289
  imminent hazard 17, 19, 23
  labeling 3, 12, 14-15
  process authority 308
  resterilized after contamination 65, 284
Automatic milking installations, definition 1, 29
Bacterial counts
  3-out-of-5 compliance 23, 190
  commingled milk 28
  containers, multi-use 69
  containers, single-service 69, 293
  cultured products 29
  enforcement procedures 24, 90
  frequency 22
  laboratory techniques 25
  pasteurized milk and milk products 23, 28
  raw milk for pasteurization 22
  recording 25
  sampling 21-22, 28
Bacterial tests
  milk and milk products 25, 28
  raw milk for pasteurization 25. 28
Bactericidal efficiency 167
Boiler Feed Water Additives
  21CFR 173.310 ..... 223, 315

Booster pump
determining maximum pressures....263
general.... 96-99, 263-267
impeller identification....97
pressure switches to control.... 96-99, 263-269
time delay relays to control.... 96-99, 263-269
wiring....97
Bottling and packaging....107
Bulk holding/cooling tanks, farm....42
Bulk milk dispensers....116
Bulk milk hauler/sampler, definition....2
qualifications....126
training....125
Bulk milk pickup tanker, definition....2
drug residue screening....322
evaluation procedures.... 130-139
inspection....16
labeling requirements....15
permit....12
permit reciprocity....129
Bulk milk sampling.... 126-133
Bulk milk storage, milk plant....66
Buttermilk, definition....2
Capping machines....109
Caps and closures....72
storage....72
Cattle diseases....30, 77, 113-115, 120
Ceilings
milk plant....55
milkhouse....35
milking barn or parlor....31
Certified
brucellosis free area....113
copies of *Ordinance*....vi
industry inspection....19
laboratory....19
Single Service Containers or Closures manufacturers....279
State Milk Sanitation Rating Officer....117, 301
State Milk Sampling Surveillance Officer....125
thermometers....124
Charts
cleaning....67
flow rate recording....100
pasteurization....85, 92, 99
recording thermometer.... 50, 85-92, 99, 224
Chemical examinations, milk....16, 28
Chemical sanitizers.... 43, 188-199
Chemical standards, milk....28
Chemical, bacteriological, and temperature standards....28
Chlorine
hypochlorite....160
organic....181
Clean, definition....2
Cleaning
boil-out....189
circulation....189

dry cleaning 192
drying and dry product euipment 192
evaporators and condensors 188
facilities 34, 65, 122-29
flanks, udders and teats 45
high pressure pump and high pressure lines 191
mechanical 38, 42, 73, 144-45, 227
mechanical sifters 194
milk tank trucks 16
spray cleaning 191
storage bins 196
storage tanks 43, 65
transport tanks 103
utensils and equipment 43, 65, 122-129
wet cleaning of dryers 190
solution sensor 227
Cleanliness
clothing 50, 110
cowyard 34
equipment 43, 65
hands 49, 110
milk plant 61
milk stools 33
milking barn 33
milking barn floors 33
milking barn gutters 33
milking barn walls and ceilings 33
milking parlor 33
personnel 49
surcingles 33
surroundings 52, 112
toilet 39
vehicles 112, 122-129
Close-coupled valves 84
Cloth-collector systems 65
Code of Federal Regulations 14, 218-219
Cold storage room 56
Coliform Counts
condensed milk 28
condensed whey 28
containers 70
dry whey 28
milk and milk products 28
nonfat dry milk 28
water supply 197
Common name, definition 2
Computer
cleaning records 65
controllers 205-227
inspection records 21
logic diagrams 228-238
pasteurization control criteria 225
terms, defined 226
Concentrated (Condensed) milk and milk products, definition 2
container closure, sealing, and storage 102
cooling 100

packaging and container filling 101
protection from contamination 71
whey, definition 10
Condensation diverting aprons 63
Condensed and dry milk products from points beyond limits of routine inspection 116
Condensing water 60, 91, 171
Construction
cleaning solution lines 42, 47, 21, 65
mechanically cleaned pipelines 42, 47, 21, 65
milk contact surfaces 64
milk pipelines 42, 47, 62
milk plant 54
milking barn, stable or parlor 31
milkroom 35
separation of products and solution lines 75
wash vats 37
water supplies 59
water system 59, 155-188
Containers
aseptic, unsterile 23
bacterial counts 70
cleaning 43
closure, sealing, and storage 109
construction of multi-use 42, 65
delivery 115
efficiency of sanitization 191-200
filling 15, 37, 109, 201
multi-use plastic 70
protected from contamination 47, 73
sanitizing 43, 191
single-service 63, 72
single-service, bacterial counts 70
storage 44, 72
Convalescent pens 31
Conveyer shields 107
Coolers
refrigerants 50, 104
surface 105
Cooling pond, definition 104
Cooling bulk tanks-farm 41, 126
Cooling temperatures retail outlets 115
Cooling water 50, 104, 202
Cottage cheese,definition 123, 124, 312
dry curd, definition 312
packaging 124
Court action 121
Cow water 92, 169
Cows
diseases 30, 113
flanks, udders and teats 46
health 30, 113, 121
housing 31
milking 34, 46
Cowyard 33
Cream, definintion 312
bacterial count 28

Cross-connection
raw to pasteurized product 77
water supply 40, 59
Culinary steam 91, 95, 170, 190, 222-225
Cultured products 28, 104, 312
Custom bottling and packaging, labeling 13
Dairy farm, definition
construction and operation 31–39
inspection report 313
plans for future construction 118
toilets 39
water supply 155-188
Dairy plant sampler 3, 16, 125
Date of effect of *Ordinance* 121
Definitions 1, 290 317
Defoamers 78, 107
Delivery containers 115
Detergent-sanitizers 191
Device, flow diversion 85–92, 204–214
Direct Microscopic Somatic Cell Count 25
Diseases
cattle 113, 124
goats 113, 124
notificaiton of 113, 119
personnel 114, 120
Disinfection
springs 166
water supplies 165
Divert flow
FDD-divert lines, restrictions 86
holding time testing 91, 269
Doors
feed storage 32
milkhouse 31
milkroom 34
plant 56
screen 34
single-service manufacturers 293
toilet 39, 59
truck unloading areas 74
vehicle 48
vestibule 34
Drainage
cowyard 34
FDD-leak protection valves 85
milk plant floors 54
milkhouse floor 36
milking barn floor 32
milking equipment 44
milk plant milk and cleaning lines 62
Drip deflectors 47
Drug
testing 22
use, storage, labeling 47
Drug residue
acceptable test results 28

Appendix N monitoring 314
avoidance, control measures....48, 152
detection 28, 202
individual producer, testing frequency 22
investigation 23
penalties 18, 315
permit suspension....13
regulatory action....24, 125
sampling 73
testing 321
testing methods....322
violative producer penalties....315
Dry buttermilk and buttermilk products, definition 2
Dry milk and milk products, definition 6
Dry storage 110
single service articles 295
lighting 57
Dry whey and whey products, definition....9
Eggnog or boiled custard, definition....3
Emergency
farm milk pick-up....43
pasteurization equipment sealing 101
sale of pasteurized milk....15, 115
suspension of permit....18
Enforcement 121
procedure....18, 24
rating 116
Environmental Protection Agency 30, 52, 75, 113, 164, 302
Equipment
cleaning 34, 43
construction and repair 41
handling after sanitizing 73
protection from contamination 47, 73
sanitizing 44
storage 44, 72
tests....249
Test Report 103, 313
Evaporation
barometric leg....60
condenser 169
temperatures 193
Evaporators
condensing water for 92, 169
falling film....193
multiple-effect 193
plate-type....193
Examination
bulk milk haulers/samplers....125
condensed and dry milk products 21
containers 70
cows 46, 113, 121
medical 118
milk and milk products (drugs) 201
water....59
Farm storage tanks
recording thermometer 51

Federal Food, Drug and Cosmetic Act....1, 70, 296, 312
adulterated food, definition....312
misbranded food, definition....312
Feed storage....32
in milking barn....32
overhead....32
Feed troughs in milking barn....32
Filling and emptying time, pasteurization vats....84
Filters....58, 164, 219, 283
Flies 39, 51, 55, 58, 103, 108
Floor construction
milkhouse....34
milk plant....54
milking barn....31
Flow alarm....100, 103, 210, 274
Flow controls, automatic....85-98
Flow diversion device....85-92, 204-215
aseptic systems....99
leak escape....85
requirements....85, 99, 204
sight glass, leak-detect line....85
testing....204
Flow-promoting devices....204-215, 250
wiring....88, 94, 259
Food allergen, definition....3
Forms
equipment test....313
inspection....313
ledger....26
Freezing point depressants....101
Frozen milk concentrate, definition....3
Gauges, pressure testing....94, 260
Glass pipelines....62
Grade A
labeling requirement....13
products, mandatory retail sale of....115
raw milk for pasteurization....26, 28
Gutters, gravity flow....33, 139
HACCP, definition....4
audit timeframes....311
audit report....310
core curriculum....308
enforcement action/follow-up....309
enforcement audits....309
hazard evaluation (analysis)....303
indusrty personnel....308
preliminary steps....298
record retention....307
records maintained on computers....308
regulatory personnel....308
required PP's....302
required records....306
State Regulatory Audits....309
training....308
Handling
abnormal milking equipment....31

containers, utensils, and equipment....72
discards and returns, separate room....57
single service containers....295
Hand
capping....
cleanliness....49, 109, 127
wash signs....294
washing....50, 110, 294
washing facilities....49, 61, 294
Hearings....12
Hermetically sealed containers....24, 92, 104, 109, 312
High pressure pump....196
High-heat-short-time pasteurization (HHST)....86
computer controls....233
controls....87
holding time....86, 88, 281
tests....103
High-temperature-short time-pasteurization (HTST)....85
computer controls....233
controls....87
holding time....86, 88, 281
mag flow meter based timing systems....86, 89, 94, 100, 209, 239
system operation....207
tests....103, 249
Holding time
batch pasteurization....82
HHST pasteurization....88
HTST pasteurization....89
tests for....275
Holding tube....86
requirements....89, 94
Homogenizers....90
timing pump....90
Hose port, milkhouse....37
Hot water
handwashing facilities....49
milkhouse....35
sanitization....44, 191
Hooved mammals milk, definition....5
Identity labeling....13
Imminent health hazard....17, 23
Impounding milk and milk products....10
Indicating thermometer
airspace....82
aseptic system....93
batch pasteurization....82
HTST pipeline....85, 89
refrigerated room....232
specifications....232
storage tank....232
testing....252
vat....226
Individual water supply....59
Industry
aseptic processing records....17
certified farm inspection....19

laboratory 20
plant samplers, definition 5
records for aseptically packaged products....24
records, drug residue testing....322
records, vitamin use....333
Ingredients, protection from contamination....73
Inlet valves....264
Insect control 51, 152
Insecticides 30, 51, 75, 113, 302
Inspection
beyond the limits of routine 116
frequency....16
posting reports....19
reports....21
Interstate shipment of milk and milk products and condensed and dry products 116
Labeling
animal drugs....48
emergency supplies 10, 15
goat milk 3
identity 13
misleading 15
premium 15
requirements....13, 15
sheep milk 8
shipping statement....15
vehicles....111
Laboratory
industry....20
official, definition....7
officially designated, definition....7
techniques and tests....24
vitamin analysis....23, 326
water analysis 40
Leak escape port....85, 260
Leak-protect valve 84, 264
Lighting
cold storage 57
dry storage....57
milk plant 56
milkhouse 35
milking area....56
production areas 57
utensil cleaning....65
Lubricants....109, 298, 305
Magnetic flow alarm....101, 212, 263
Manual of Individual Water Supply Systems 163, 171
Manure disposal....52
Mastitis control....30, 124, 151
Medical examination 119
Metering pump
pasteurizer 91, 94, 260
vitamin 330
Milk
abnormal, definition 1
abnormalities of milk, definition 1
acidified, definition 312

adulterated 1, 9, 29, 200, 306
aseptically processed, definition 315, 328
bacterial counts 22, 24, 28
cans 14, 43, 115
standards 28
concentrated (condensed), definition 2
contamination, definition 1
cooling 50, 104, 132
cultured 5, 312
definitions from the Code of Federal Regulations 1, 312
dipping or ladling 115
dispensing 115
distributor, definition 5
drug residue detection 321
emergency sale of 10, 15, 115
examination of 16, 21–26, 30, 321
flavored 22
flow controls 85, 207, 272
from distant sources 116
goat, definition 3
grade "A" for pasteurization 26
grade "A" pasteurized 26, 54
heat-treated 8, 14, 22, 26, 28, 66, 132, 338
lowfat 6, 312
lowfat, (refer to 21 CFR 130.10) 312
lowfat, sampling requirement 22
misbranded 9
plant, definition 5
  cleanliness 61
  direct openings into 56
  doors and windows 56
  floor construction 54
  hand-washing facilities 61
  inspection 16
  inspection reports 21, 313
  lighting and ventilation 56
  receiving room 57
  return product area 57, 73
  separate rooms 57
  sewage disposal 58
  surroundings 112
  toilets 58
  utensil wash 111
  walls and ceilings 55
  water supply 59
  processing other products in milk plant 73
producer, definition 5
product, definition 5
products defined by 21 CFR 130.10 ..... 6, 312
protected from contamination 17, 44, 47, 65, 73
protected from other products 78
pumps 89
reconstituted or recombined, definition 8, 14, 78
reduced fat (refer to 21 CFR 130.10) 6, 312
sanitaiton ratings 116
sheep milk, definition 8

somatic cell count....22-25, 28, 124, 189, 329
spilled, overflowed or leaked....47, 78
standards - chemical, bacteriological, and temperature....28
standards of identity....312
straining....41
tank truck, definition....6
inspection requirement....16
tank truck cleaning facility, definition....6
inspection requirement....16
tank truck driver,definition....7, 126
transferring....37, 46, 126
transport tank, definition....7
used for cooling/storage on farm....35
transportation....41, 43, 47
transportation company, definition....7
undesirable, definition....1
ungraded, sale of....10, 15
vitamins in....206, 333
water buffalo milk, definition....9
Milking stools....33
Misbranded food, definition....312
impounding....10
sale of....1
Monetary penalty....12, 189
Multiuse containers, utensils and equipment....65
National Mastitis Council....124, 151
Nutrient content claim....6, 326
Optional ingredients....6
Outlet valve....80, 82
Overcrowding
dairy barn....32
milk plant....72
Overflow
milk and milk products....47, 73
condensing water....60
pasteurizer constant level tank....78, 97
product....78
Overhead piping....78
Packaging
aseptic....107
equipment....63, 65, 107, 109
machines....104
rooms....58
single-service articles....42
Partitioning
milk plant....57
milking barn....32
receiving stations....54
Pasteurization, definition....7
automatic milk or milk product-flow control....39
CCP model HACCP plan summary....54, 246
electromagnetic interference....227, 251
equipment tests and examinations....99, 249-289
flow-promoting devices....89
heating by direct addition of steam....88-95
HHST....88–93

HTST....82–88
holding tube....88
indicating and recording thermometers....89
liquid ingredient injection....209
magnetic flow-meter based timing systems....204
milk or milk product-flow controller instrumentation....85
milk or milk product-to-water-to-milk or milk product regenerative heating....98
pasteurization and aseptic processing records, equipment tests and examination....99
pressure relief valves....210
prevention of milk or milk product adulteration with added water....92
product-to-product regenerative heating....99
recording records....936
sequence logic....235
steam block type FDD....87, 245
steam injection....90
systems with regenerators....96
vat (batch)....83
Penalties....121
drug residue....117
immenent health hazard....18
monetary....12, 189
Permits
bulk milk hauler/samplers....11
hearings....11
issuance of....11
milk distributor....11
milk plant operater....11
milk producer....11
milk tank truck....11, 130
milk tank truck cleaning facility....11
milk transportation company....11, 130
receiving station....11
reinstatement of....11
requirements for....11
revocation of....11, 315
suspension of....11, 315
transfer station....11
Person, definition....8
Personnel
cleanliness....49, 110
health....118
infection, procedure when suspected....119
medical examination....118-119
notification of disease....118-119
Pesticides....23, 73, 152, 201
insecticides....73
rodenticides....73
Phosphatase reactivation....201
Pipelines
capacities, table of....150
glass....42, 62, 64
indicating thermometer....82, 85, 93, 99, 228, 255
mechanically cleaned....41, 47, 62
welded....41, 60
sanitary....37, 41, 62, 148

Plans
dairy farm 118
milk plant 118
milkhouse 38
milking barn 148
pipeline systems 42
sewage disposal 148
Plant (milk), definition 5
Plastic
containers, multi-use 42, 62, 69
containers, single-service 42, 62, 69
materials 296
recycled waste 290
Posting inspection report 19
Pressure
differential controller 266
gauges 97, 267
sensors 97
testing gauges 97
relative, in regenerator 96, 207
Product contact surfaces 43, 84
Programmable controller 239
Protected from contamination 17, 45, 51, 72, 105, 109-111, 200, 297
Public health hazard 11, 19, 59
Pumps
booster pump wiring 260
centrifugal 212
maximum booster pump pressure 263
milk 45, 154
milk, computer controlled 233
milk overflow protection 38
milk, pressure switches 267
milk pump placement 212
milk, time delays 213
regenerator bypass 207
timing 90
water 41, 160
Receiving station, definition 8
inspection frequency requirement 16
permit required 12
sanitation requirements 54
Recorder/controllers 85, 89, 93, 235, 239, 266, 276
Recording thermometer 51, 82, 232, 236, 256, 268
aseptic system 93
aseptic system, chart reviewed by management 101
batch pasteurizer 82-85, 227-231, 253
chart requirements 100
farm cooling 51
farm storage tanks 51
HTST pipeline 85, 89
mechaincal cleaning system 150, 193, 212, 239
storage tank 235
testing 256
Records
access to industry 17
aseptic processing 15, 19, 96

batch pasteurization 82
certified inspector 120
cleaning, electronic storage 67
equipment cleaning/sanitizing 66
farm bulk tank 51
farm inspection 21
flow rate recorder 101
hearing 13
HHST 100
HTST 85
pasteurization 99
producer 19
vat (batch) 82, 99
water testing 41, 60
Regenerators
milk-to-milk 96, 208, 214
milk-to-water-to-milk 98
Regulatory agency, definition 8
Relays, time delay 86, 97, 213, 261, 254, 281
Repair of containers, utensils and equipment 63
Repasteurization 73
Repeal 121
Requirements for Foods Named by Use of a Nutrient Content Claim 6
Returned products, repasteurized 73
Reverse Osmosis (RO) 78
Rodent control 152, 302
Rubber and rubber-like material 42, 62
Safe levels, drug residues 322
Sale of
Grade "A" pasteurized milk and milk products 115
adulterated milk and milk products 1
ungraded milk and milk products 15, 115
Samples
agitation 26, 47, 74, 83, 127, 138
containers, multi-use 69
containers, single-service 69, 202, 314
drug residues 23, 202, 317
milk for pesticides 201
universal sampling system 125
vitamin 23, 49, 203, 326
milk and milk products 16
application and frequency 13, 21–26
examination 21
procedures 24
water
application and frequency 41, 59
examination 59
recirculated or reclaimed water 169
Sanitation requirements
grade "A" pasteurized milk and milk products 19, 53-58
grade "A" raw milk for pasteurization 19, 30-53
Sanitization, definition 8
assembled equipment 69
bottle 61, 68, 71
cans 44, 65, 116
containers, multi-use 65

containers, single-service 65
general requirements 44, 65, 191
farm utensils and equipment....43
milk tank trucks....67, 131
plant utensils and euipment....44, 65
pipelines 44, 65
teats 46, 150
transport tanks 67, 131
Sanitizers
storage 48, 73
test kit....128
chemical 186
efficiency of 68
hot air 68
hot water....186
hypochlorites 186
iodine....186
measuring the strength of solutions....52–56
organic chlorine....186
quarternary ammonium compounds....186
steam 186
Screening tests for milk 25, 125
Seal
bulk milk pickup tanker.... 128-129
computer controls....226
differential pressure controller 91
emergency pasteurization equipment, by industry 95
flow controls, time delays 208
flow-promoting devices, controllers....208
indicating thermometers....222
loss of signal alarm....208
milk tank truck 34
milk transport tank 13
organic contaminant detector, multi-use bottles 68
temperature recorder/controller....90
thermal-limit-controller....85
Sensor
cleaning solution temperature 227
pressure 95, 96
temperature.... 85, 87
Separability clause....117
Sewage disposal....141
facilities....38, 57,287
Sewers, distance from water supply 152
Shields
conveyer....100, 284
open-surface coolers....103
packaging machines 104, 105
Shipping statement 13
Shutting down steam heat dryer 192
Sifters 193
Single-service articles....41, 68
Solution lines, mechanical cleaning....40, 61, 227
Stainless steel....41, 61, 63, 82
Standard Methods
for the Examination of Dairy Products....22, 23, 25, 28, 122, 286

for the Examination of Water and Wastewater 160, 166
Standardization of milk and milk products 72
Standards
3-A sanitary 42, 64, 127
chemical and bacteriological tests for water and milk 197
chemical, physical, bacteriological, and temperature 27
culinary steam quality 219
milk and milk products 25
of identity 291
OSHA 126
performance-based dairy farm inspection system 324
single service articles, bacteriological 285
water 27, 28
water supply 39
Steam
block 74, 75, 236
controls for injection pasteurizers 213
direct injection, differential pressure 87, 92
infusion, holding time 274
injection 88
non-condensable gasses 89
sanitizing 188
toxicity 72, 219
volume control 86
Storage
aseptically processed milk 23
bulk milk storage tanks 57
drugs and chemcials 47
dry products 54
feed 31
milk transportation tank on farm 34
ingredients and non-product contact materials 70
milk in final container 112
multi-use containers, utensils and equipment 35, 40, 43, 70
on farm, partial pick-up 43
product 71
sanitizers 71
single-service articles 70
single-service closures 102
single-service containers, utensils, equipment 70
temperatures 102
toxic materials 71, 72
Storage bins
cleaning 70, 196
portable bins 196
Storage tank
farm 40, 42, 50
milk plant 57, 103
Strainers 41, 44, 63, 72
Straining milk in barn 46
Submerged inlets, water supply 39, 166
Surcingles 33
Surface coolers 103
Surroundings
dairy farm 52
milk plant 112

single-service manufacturing plant....298
Sweeteners....80, 100
Switches, automatic, manual....88, 93, 237
Tailings....62, 65
Tamper proof closure....109
Tanks
bulk holding/cooling tanks, farm....42
bulk storage, milk plants....58, 63-65
farm, cleaning....44
storage and transportation, protection....14
transportation....41
Teats, cleaning and sanitizing....46
Temperature
aseptic milk storage....19
charts....50, 51, 68, 85-89
cooling....50
cut-in and cut-out tests for....266
delivery/retail....116
heat-treated milk or cream....26
milk during separation....26
milk storage requirements....104
pasteurization....7, 17
raw milk for pasteurization....50
recording device....35, 51, 66
sample....127
sensors....87, 89
standards....28
Tests
airspace thermometer....84, 103, 249
aseptic processing equipment....99
aseptically packaged milk and milk products....23
booster pump....103, 255, 261-265
coliform....25
control logic....103
control switches, regenerator pressure....103, 261
cut-in, cut-out temperatures....100, 103, 260, 266
drug residue....23, 25, 202
equipment....101, 103
flow-diversion device operation....103
frequency, individual producer, raw milk....22
frequency, pasteurized milk products....22
HHST holding time, calculated from pumping rate....89
holding time....103
holding time, divert flow....91
HTST holding time....91
HTST recorder/controller....103
indicating thermometers....103
laboratory techniques....24
leak-protector valves....103
mastitis screening....124
pasteurization holding time....94
pesticide residues....23, 30
pH (hydrogen-ion concentration)....187
phosphatase....23
pressure gauges....103
recirculated cooling water....51

recorder/controller 103
recording thermometers 103
recording thermometers, check against indicating 103
regulatory access to 16
residual chlorine 185
sanitizer strength 69
sanitizing, efficiency of 181
single-service articles, bacteriological 67
thermometric response ..... 229 ,231, 238, 260
time delay relays 256, 274
vacuum systems, HHST 103
vitamins 23
water supplies, frequency 40
water, hardness 222
Thermal-limit-controller 87, 92, 250, 268, 281
Thermometer
airspace 82, 99, 228, 249
aseptic system 92
batch pasteurization 82
batch pasteurizer, recorder 229
bulk milk hauler/sampler, calibrated 89
charts recording 89
daily comparison of indicating and recording 82
farm bulk milk tanks 50
farm tank compared with hauler/sampler 124
general purpose 242
HTST pipeline 86, 89
indicating 225
mechanical cleaning systems 225
pasteurization 85
pipeline 225
recording 225
recording, mechanical cleaning system 232
recording, storage tank 232
refrigerated room 106, 233
specifications 225
storage rooms 225
storage tank 105
temperature sensors 225
test, specifications 248
Time/temperature control for safety of milk amd milk products, definition 8
Appendix R-Determination 334
Tobacco products,use prohibited 111
Toilet
chemical 137
cleanliness 58
dairy farm 49
doors 59
flush 40, 49, 59, 134
lighting 58
milk plant 58
overflow 40, 134, 137
privies 134, 136
single-service manufacturers 292
ventilation 58
Toxic materials 31, 42, 62, 73, 201, 215, 295

Transfer station, definition....98
sanitation requirements....54
Transferring milk....115
Transportation tank
cleaning and sanitizing....35
construction requirements....41
cooling of milk in....104
cooling of milk in on farm....35
shipping statement....14
suitable shelter....38
unloading....112
Trash storage....112, 150
Tube, holding....88 ,94
Tuberculosis....46, 114, 124
Udder....30, 34, 46
Ultra-Filtration (UF)....81
Ultra-pasteurization (UP), definition....9
Unconstitutionality clause....121
Ungraded milk and milk products....10, 15, 115
United States Department of Agriculture....124
Utensils
cleaning....23
construction....41, 63-65
handling after sanitizing....47, 72
protected from contamination....73
sanitizing....31, 43
storage....72
Vacuum
breaker....90, 97, 192
condenser water feed line controls....89
equipment....60, 91, 96
low-promoting device....90, 97, 192
hoses, milking machine....45
steam volume control....89
water used to produce....60
Validity of Ordinance....121
Valves
block-and-bleed....75
close-coupled....84
design....63
divert....87
inlet and outlet....82
protected from contamination....48
Vats
agitation....83
covers....64
farm wash and rinse....35, 38, 50
milk plant utensil wash....68
pasteurizing....83
outlet valve....82-85, 127, 130
receiving and dump
Vehicles
construction....111
doors....112
labeling....14

Ventilation
dairy barn 31, 148
milk plant 56
milkhouse 35, 148
pressurized....57
toilet room 39, 58, 134-39
Vermin control 52, 148
Vestibule, milkhouse....37
Violations, procedures when noted....16, 121, 130
Vitamin
addition to milk 323-328
analysis....203
test methods....26
use records....324
Walls
barn, stable or parlor....31, 148
milk plant 55
milkhouse 35,148
Waste disposal 34-36, 39, 58, 62, 134, 293
Water
boiler feed.... 221-231
examination of....60
hardness, test for....185
laboratory samples....41
recirculated cooling 104
reclaimed 168
Water supplies
bacteriological tests, (MPN) and Millipore filter 200
chemical treatment, equipment for 167
coliform standards 200
condenser 59, 95, 169
construction 40, 59, 155
disinfection of source 164
distance from sources of contamination 156
distribution systems, disinfection 59
examination of....41
farm 40
individual 59
location....156
milk plant 59
sampling frequency 155
sanitary survey 155-157
special protection 59
springs 161
standards....41, 155
surface water 163
treatment of 59
Wells
bored....59, 172
buried well....41
casings and linings 158
covers and seals....159
diagrams 172-188
disinfection....164
drilled 59
dug....159

manholes 161, 186
pits and drainage 160
Whey and whey products, definition
acid whey, definition 81
standards.....28
condensed whey and dry whey storage tanks.....105
condensed, definition 29
cooling.....104
crystallization 72, 104-106
dry, definition 69
examination of.....21
from distant sources 116
transportation.....73
Windows
milk plant 55
milkhouse 39
single-service manufacturing facility 277